



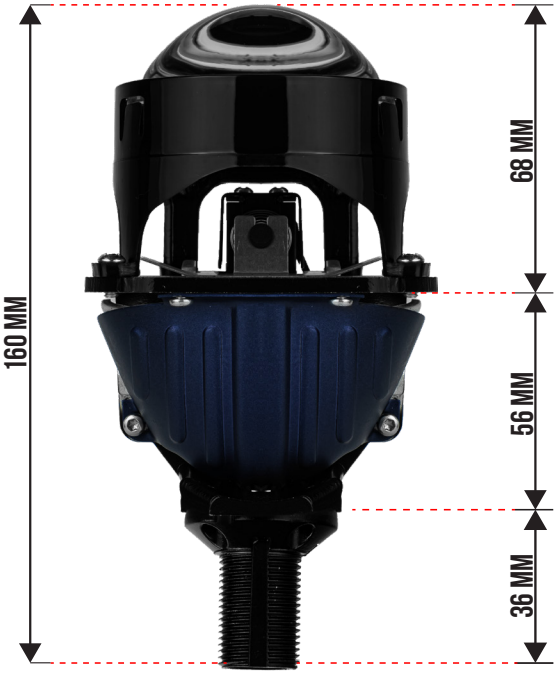



SIZE	COLOR TEMPERATURE	VOLTAGE	POWER	LED
2.5 inch	6500K	DC 9-16 V	Low Beam 50 W High Beam 60 W	4575-CSP 6-Core

ILLUMINANCE	DRIVE	HEAT DISSIPATION	TANGENT
About 4.800 Lm (5 m)	External Driver	Turbo Fan	Flat Cut-Off





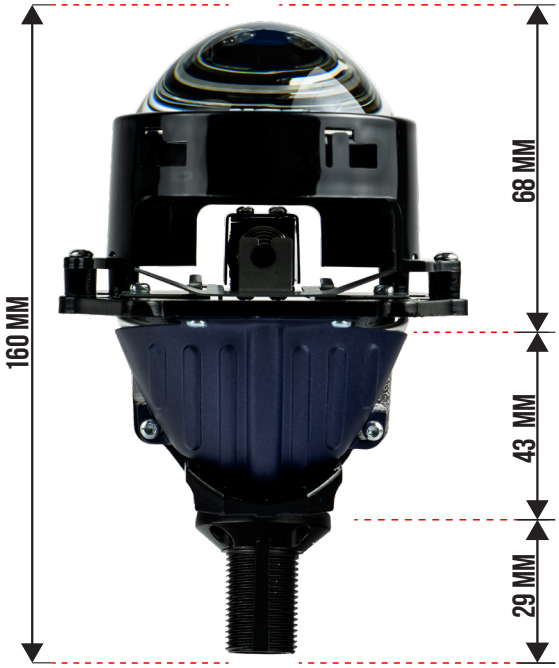



SIZE	COLOR TEMPERATURE	VOLTAGE	POWER	LED
3.0 inch	6500K	DC 9-16 V	Low Beam 50 W High Beam 60 W	4575-CSP 6-Core

ILLUMINANCE	DRIVE	HEAT DISSIPATION	TANGENT
About 4.800 Lm (5 m)	External Driver	Turbo Fan	Flat Cut-Off









SIZE	COLOR TEMPERATURE	VOLTAGE	POWER	LED
2.5 inch	6000K	DC 9 -16 V	Low Beam 55 W High Beam 65 W	3570-CSP 12-Core

ILLUMINANCE	DRIVE	HEAT DISSIPATION	TANGENT
About 4.000 Lm (5 m)	Internal Driver	Turbo Fan	Flat Cut-Off





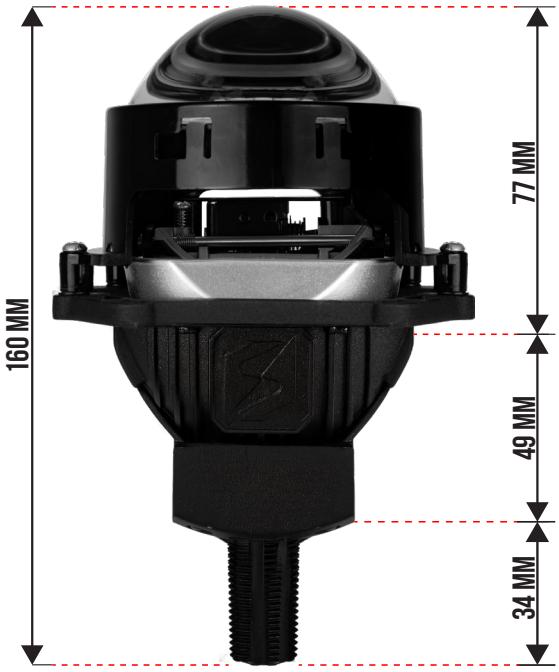



SIZE	COLOR TEMPERATURE	VOLTAGE	POWER	LED
3.0 inch	6000K	DC 9-16V	Low Beam 2 x 60 W High Beam 2 x 70 W	3570-CSP 6-Core 3570-CSP 3-Core

ILLUMINANCE	DRIVE	HEAT DISSIPATION	TANGENT
About 2 x 4.600 Lm (5 m)	Internal Driver	Turbo Fan	Flat Cut-Off

HELIOS PX90





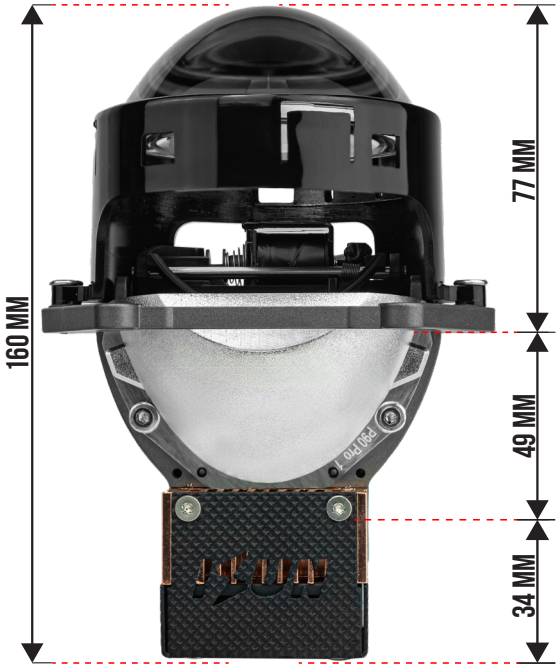



SIZE	COLOR TEMPERATURE	VOLTAGE	POWER	LED
3.0 inch	6000K	DC 9-16V	Low Beam 2 x 80 W High Beam 2 x 90 W	3570-CSP 6-Core 2 x 5050-CSP 1-Core

ILLUMINANCE	DRIVE	HEAT DISSIPATION	TANGENT
About 2 x 6.300 Lm (5 m)	Internal Driver	Copper Heatsink Turbo Fan	Flat Cut-Off



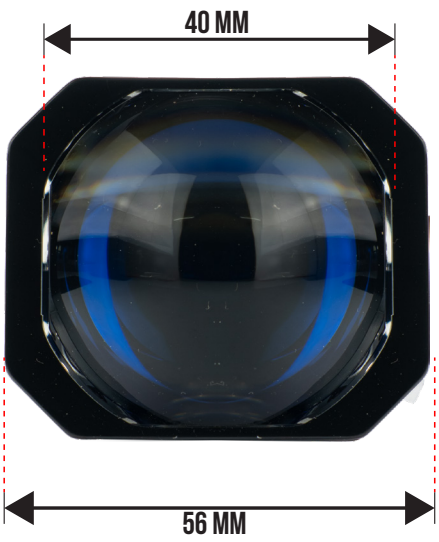

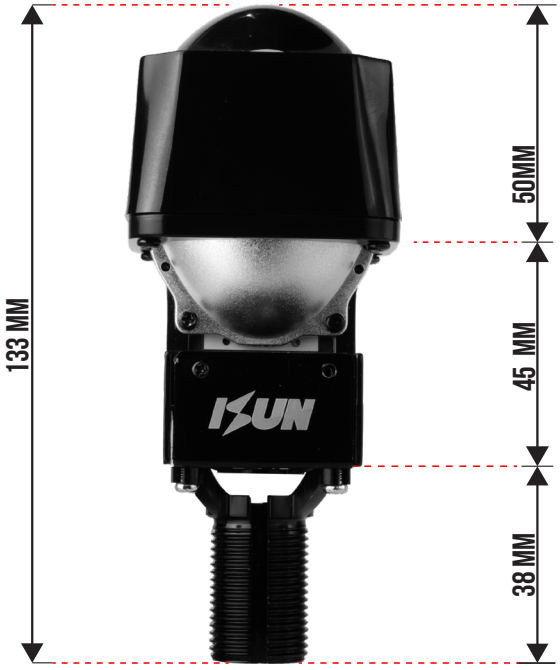



SIZE	COLOR TEMPERATURE	VOLTAGE	POWER	LED
1.5 inch	6000K	DC 9 -16 V	Low Beam 35 W High Beam 45 W	3570-CSP 6-Core

ILLUMINANCE	DRIVE	HEAT DISSIPATION	TANGENT
About 2 x 2.500 Lm (5 m)	Internal Driver	Turbo Fan	Flat Cut-Off









SIZE	COLOR TEMPERATURE	VOLTAGE	POWER	LED
2.0 inch	6000K	DC 9-16V	Low Beam 2 X 30 W High Beam 2 X 50 W	3570-CSP 6-Core 3570-CSP 3-Core

ILLUMINANCE	BRACKET	HEAT DISSIPATION	TANGENT
About 2 x 4.000 Lm (5 m)	Toyota Honda Oval (not included)	Aviation Alloy	Flat Cut-Off Laser Spot Beam







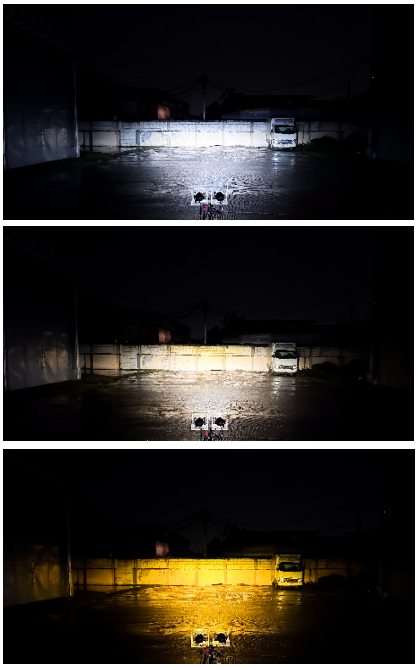

SIZE	COLOR TEMPERATURE	VOLTAGE	POWER	LED
2.0 inch	6000K, 4300K, 3000K	DC 9-16V	Low Beam 2 X 35 W High Beam 2 X 37 W	4575-CSP 6-Core

ILLUMINANCE	BRACKET	HEAT DISSIPATION	TANGENT
About 2 x 2.000 Lm (5 m)	Toyota Honda Oval (not included)	Aviation Alloy	Flat Cut-Off









SIZE	COLOR TEMPERATURE	VOLTAGE	POWER	LED
3.0 inch	6000K, 4300K, 3000K	DC 9-16V	Low Beam 2 X 35 W High Beam 2 X 37 W	4575-CSP 6-Core

ILLUMINANCE	BRACKET	HEAT DISSIPATION	TANGENT
About 2 x 2.250 Lm (5 m)	Toyota Honda	Aviation Alloy	Flat Cut-Off









SIZE	COLOR TEMPERATURE	VOLTAGE	POWER	LED
3.0 inch	6000K, 4300K, 3000K 6000K Spot Beam	DC 9-16V	Low Beam 2 X 30 W High Beam 2 X 50 W	4575-CSP 6-Core 3570-CSP 3-Core

ILLUMINANCE	BRACKET	HEAT DISSIPATION	TANGENT
About 2 x 6.000 Lm (5 m)	Toyota Honda	Aviation Alloy	Flat Cut-Off Laser Spot Beam

FLP-1 DX





1 TAHUN GARANSI







SIZE	COLOR TEMPERATURE	VOLTAGE	POWER	LED
3.0 inch	6000K 6000K/3000K-Laser Bar	DC 9-16V	Low Beam 2 X 35 W High Beam 2 X 60 W	3570-CSP 6-Core 2 x 3570-CSP 3-Core

ILLUMINANCE	BRACKET	HEAT DISSIPATION	TANGENT
About 2 x 2.500 Lm (5 m)	Toyota Honda	Aviation Alloy	Flat Cut-Off Laser Bar Beam

EREBUS









	COLOR TEMPERATURE	VOLTAGE	POWER	LED
3 inch	6000K, 4300K, 3000K	DC 9-16 V	Low Beam 2 x 60W High Beam 2 x 60W	CSP-3570-2 COLOR CSP-5050 (Laser)

ILLUMINANCE	DRIVE	HEAT DISSIPATION	TANGENT
About 2 x 15.000 Lm (5 m)	Internal Driver	Copper Pipe Heatsink Turbo fan	Flat Cut-Off Laser Spot Beam



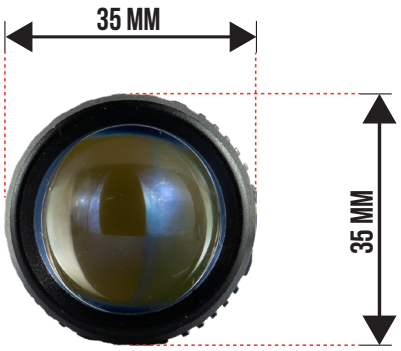





SIZE	COLOR TEMPERATURE	VOLTAGE	POWER	LED
Ø 35 mm x 60 mm	3000K & 6000K 6000K & 6000K	DC 9-80 V	Low Beam 2 x 35 W High Beam 2 x 35 W	3570-CSP 6-Core

ILLUMINANCE	DRIVE	HEAT DISSIPATION	OUTPUT MODE
About 2 x 1.500 Lm (5 m)	External Driver	Turbo Fan	Low Beam, High Beam, D3



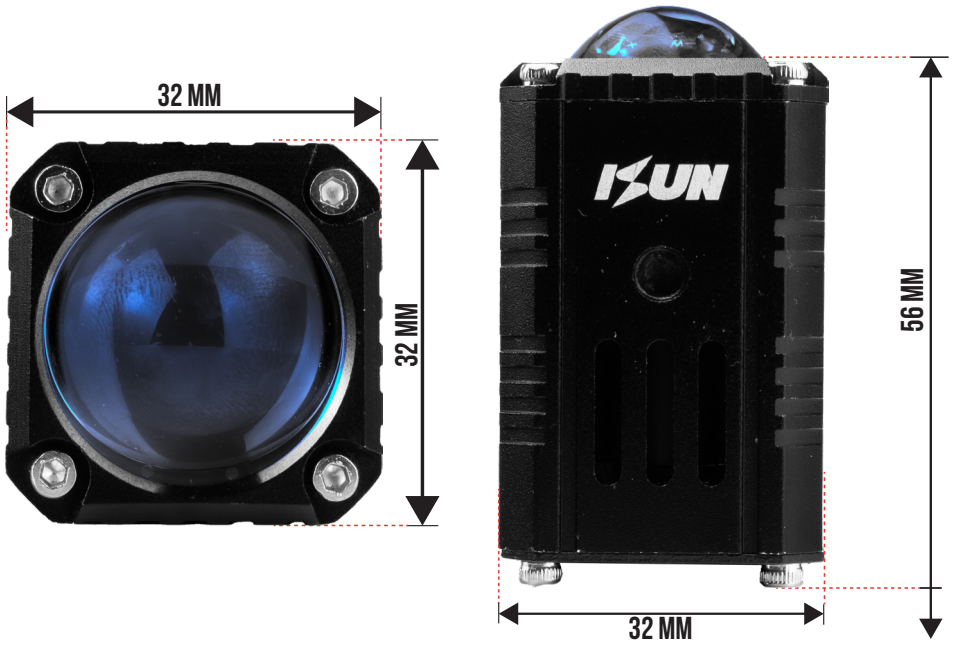



SIZE	COLOR TEMPERATURE	VOLTAGE	POWER	LED
32 mm x 32 mm x 55 mm	3000K & 6000K 6000K & 6000K	DC 9-80 V	Low Beam 2 X 30 W High Beam 2 X 30 W	3570-CSP 6-Core

ILLUMINANCE	DRIVE	HEAT DISSIPATION	OUTPUT MODE
About 2 x 1.200 Lm (5 m)	External Driver	Turbo fan	Low Beam, High Beam, D3



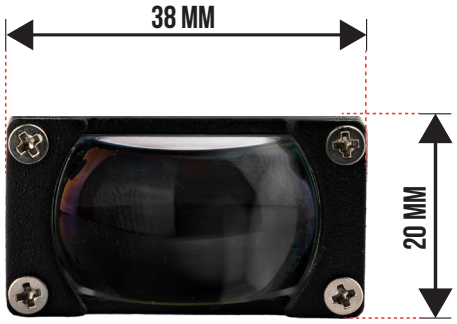





SIZE	COLOR TEMPERATURE	VOLTAGE	POWER	LED
38 mm x 20 mm x 60 mm	3000K & 6000K 6000K & 6000K	DC 9-80 V	Low Beam 30 W High Beam 30 W	3570-CSP 6-Core

ILLUMINANCE	DRIVE	HEAT DISSIPATION	OUTPUT MODE
About 1.500 Lm (5 m)	External Driver	Turbo Fan	Low Beam, High Beam, D3

EXB 1



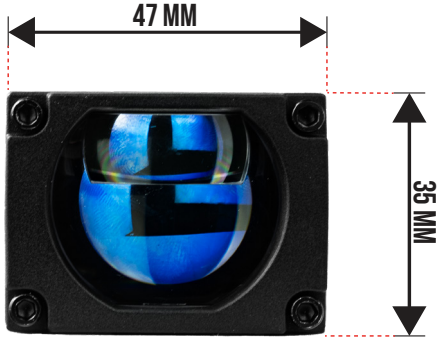





SIZE	COLOR TEMPERATURE	VOLTAGE	POWER	LED
47 mm x 35 mm x81 mm	6000K	DC 9-16 V	Low Beam 2 x 60W High Beam 2 x 60W	3570- CSP 6-Core Customized Eclipse Laser CHIP

ILLUMINANCE	DRIVE	HEAT DISSIPATION	OUTPUT MODE
About 2 x 4.700 Lm (5 m)	External Driver	Copper Airflow Turbo fan	Flat Cut-Off Eclipse Laser Spot Beam



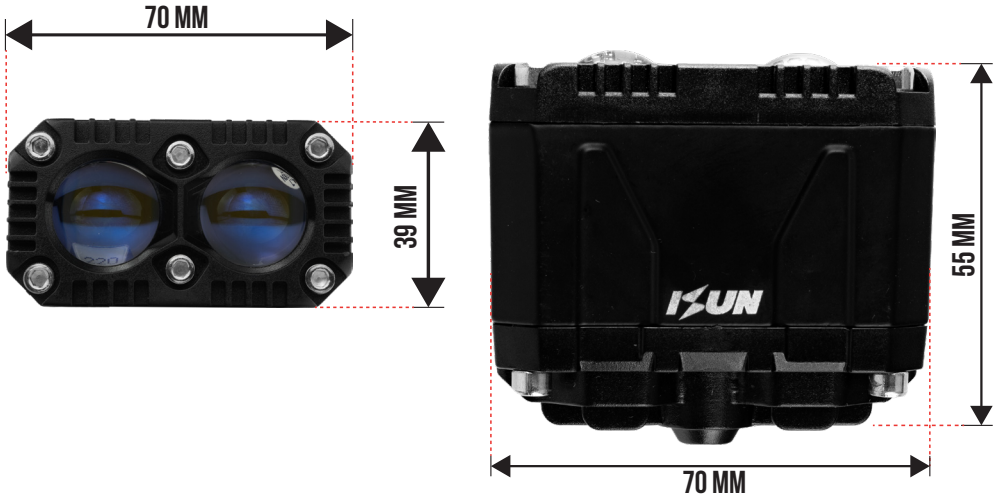



SIZE	COLOR TEMPERATURE	VOLTAGE	POWER	LED
70 mm x 39 mm x 70 mm	3000K & 6000K 6000K & 6000K	DC 9-80 V	Low Beam 25 W High Beam 25 W	2 x 3570-CSP 6-Core

ILLUMINANCE	DRIVE	HEAT DISSIPATION	OUTPUT MODE
About 1.500 Lm (5 m)	Internal Driver	Aviation Alloy	Low Beam, High Beam, D3



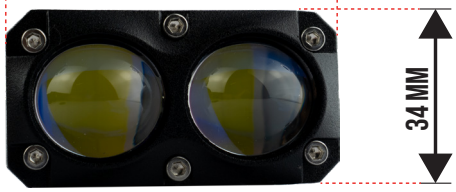



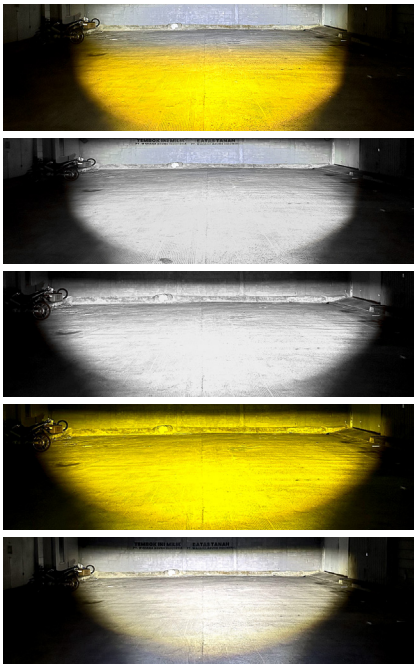

SIZE	COLOR TEMPERATURE	VOLTAGE	POWER	LED
61 mm x 34 mm x 62 mm	3000K & 6000K 6000K & 6000K	DC 9-80 V	Low Beam 2 x 45 W High Beam 2 x 45 W	2 x 3570-CSP 6-Core

ILLUMINANCE	DRIVE	HEAT DISSIPATION	OUTPUT MODE
About 2 x 2.000 Lm (5 m)	External Driver	Big Turbo Fan	Low Beam, High Beam, D3



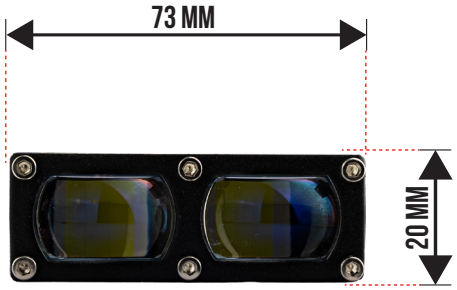

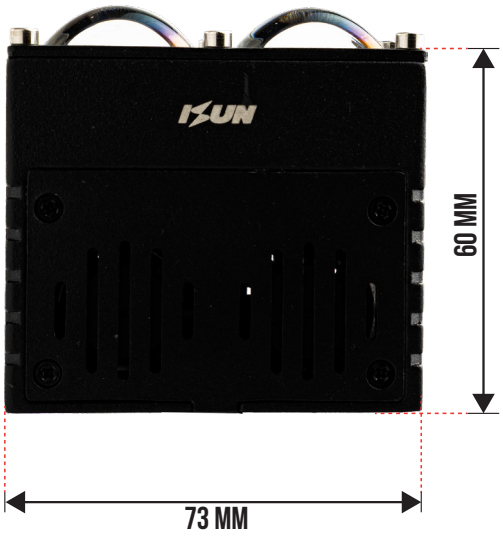



SIZE	COLOR TEMPERATURE	VOLTAGE	POWER	LED
73 mm x 20 mm x 60 mm	3000K & 6000K 6000K & 6000K	DC 9-80 V	Low Beam 40 W High Beam 40 W	2 x 3570-CSP 6-Core

ILLUMINANCE	DRIVE	HEAT DISSIPATION	OUTPUT MODE
About 1.800 Lm (5 m)	External Driver	Dual Turbo Fan	Low Beam, High Beam, D3



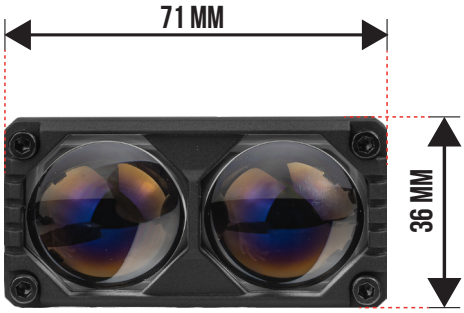

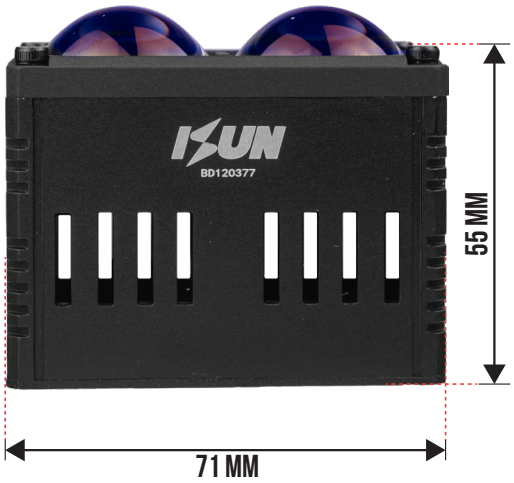

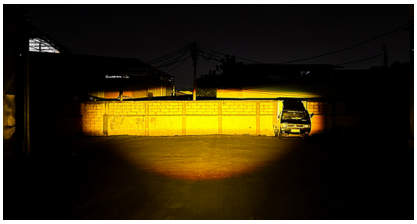

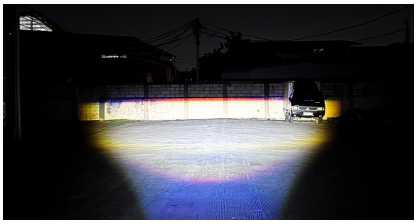

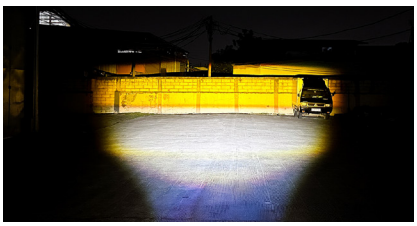

SIZE	COLOR TEMPERATURE	VOLTAGE	POWER	LED
71 mm x 36 mm x 55 mm	6000K & 3000K	DC 9-80 V	Low Beam 45 W High Beam 45 W	2 x 3570-CSP 6-Core

ILLUMINANCE	DRIVE	HEAT DISSIPATION	OUTPUT MODE
About 3.000 Lm (5 m)	External Driver	Dual Turbo fan	Low Beam, High Beam, D3

LGS 3



1 TAHUN GARANSI

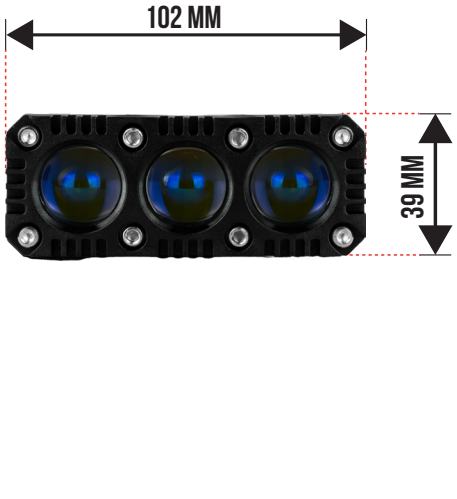

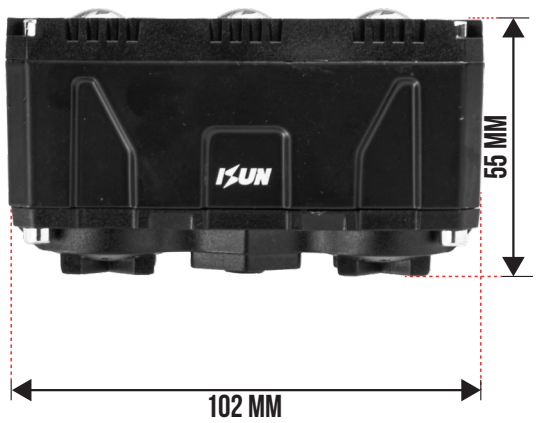



SIZE	COLOR TEMPERATURE	VOLTAGE	POWER	LED
102 mm x 39 mm x 55 mm	3000K & 6000K 6000K & 6000K	DC 9-80 V	Low Beam 40 W High Beam 40 W	3 x 3570-CSP 6-Core

ILLUMINANCE	DRIVE	HEAT DISSIPATION	OUTPUT MODE
About 2.500 Lm (5 m)	External Driver	Dual Turbo Fan	Low Beam, High Beam, D3



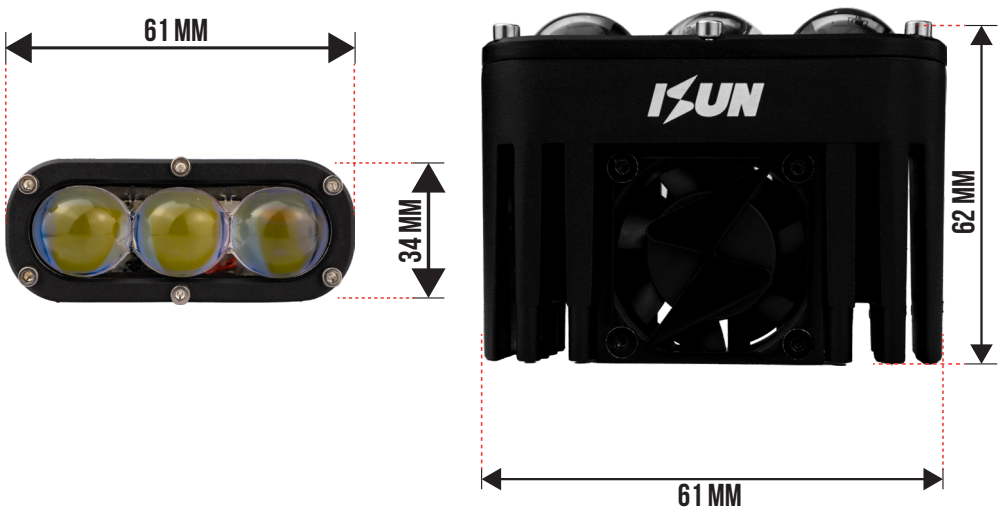





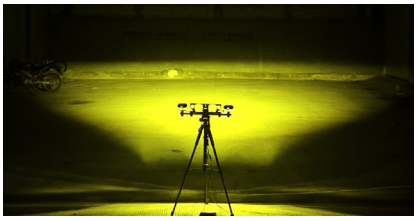

SIZE	COLOR TEMPERATURE	VOLTAGE	POWER	LED
61 mm x 34 mm x 62 mm	3000K & 6000K 6000K & 6000K	DC 9-80 V	Low Beam 2 x 60 W High Beam 2 x 60 W	3 x 3570-CSP 6-Core

ILLUMINANCE	DRIVE	HEAT DISSIPATION	OUTPUT MODE
About 2 x 2.800 Lm (5 m)	External Driver	Big Turbo Fan	Low Beam, High Beam



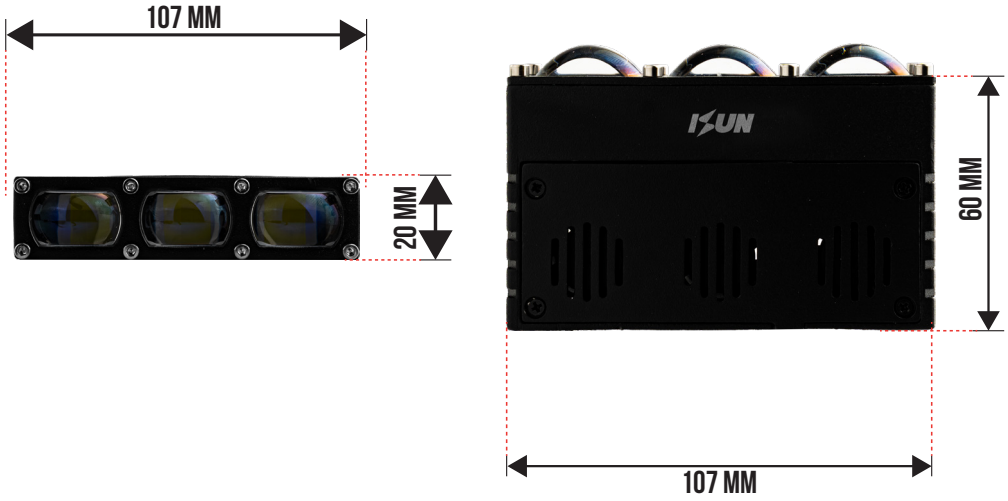



SIZE	COLOR TEMPERATURE	VOLTAGE	POWER	LED
107 mm x 20 mm x 60 mm	3000K & 6000K 6000K & 6000K	DC 9-80 V	Low Beam 60 W High Beam 60 W	3 x 3570-CSP 6-Core

ILLUMINANCE	DRIVE	HEAT DISSIPATION	OUTPUT MODE
About 2.800 Lm (5 m)	External Driver	Triple Turbo Fan	Low Beam, High Beam, D3



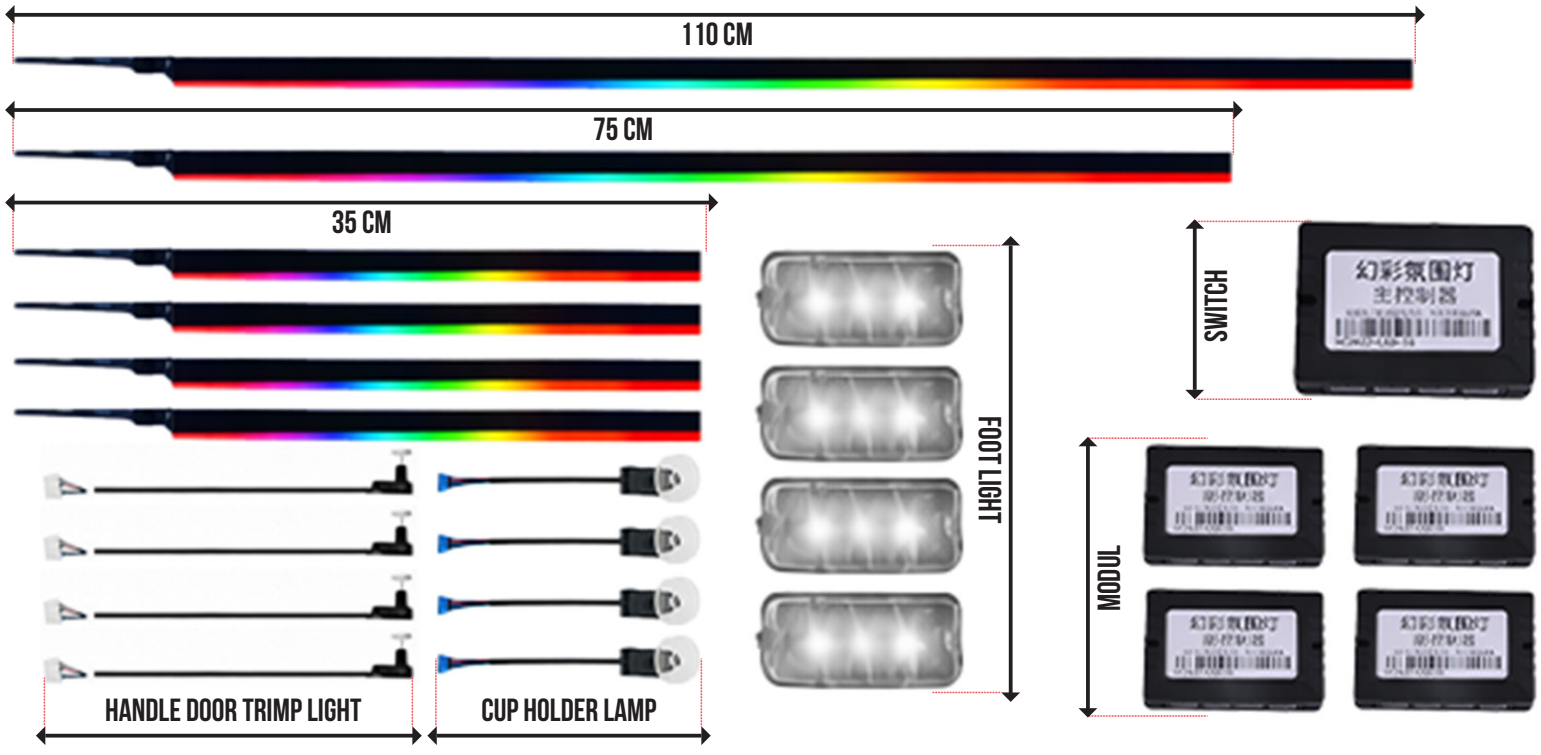

INCLUDED			VOLTAGE	POWER	FUNCTION
Acrylic Strip LED 110 cm Acrylic Strip LED 35 cm x 4 Acrylic Strip LED 75 cm	Foot Light Cup Holder Lamp Handle Door Trimp Light	Tools Set Modul Switch	DC 12V	18W	Decorative Interior Light



5D ACRYLIC CAR SHROUD

Shroud 5D berbahan acrylic yang berfungsi mempercantik tampilan headlamp. Memberikan efek visual lebih modern dan membuat lampu terlihat lebih rapi serta premium. Tersedia dalam ukuran 2'5 Inch dan 3'0 Inch

I5-0-30-WRGB APP

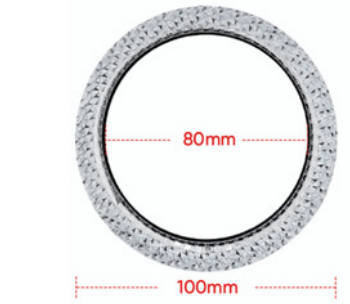

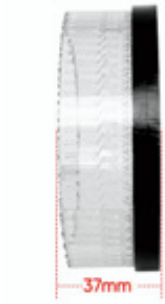



I8-V-25-WRGB APP







I8-V-30-WRGB APP

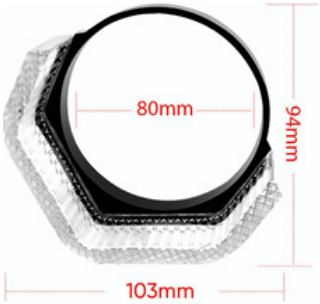





I7-0-30-WRGB APP

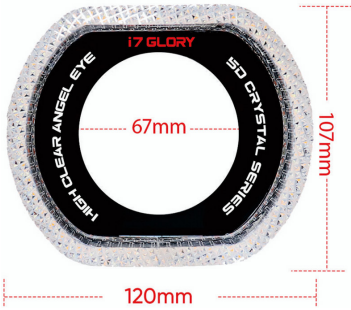

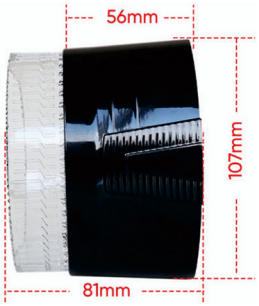



I7-U-30-WRGB APP

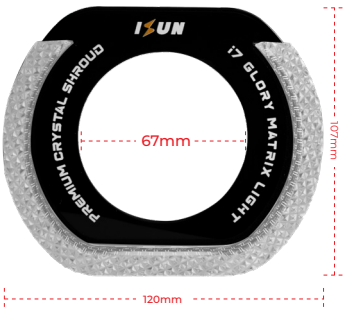

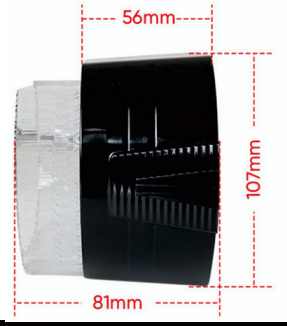

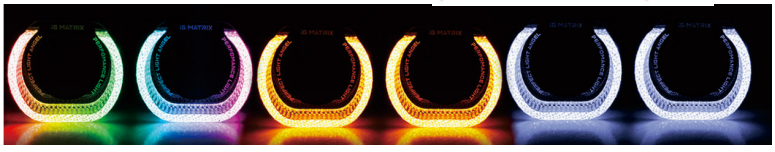

I9-0-25-WRGB APP

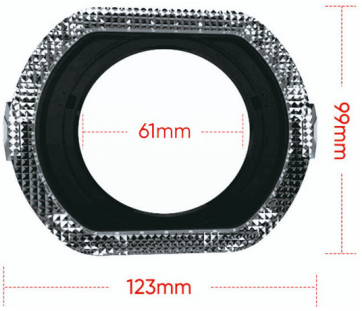







5D ACRYLIC CAR SHROUD

Shroud 5D berbahan acrylic yang berfungsi mempercantik tampilan headlamp. Memberikan efek visual lebih modern dan membuat lampu terlihat lebih rapi serta premium. Tersedia dalam ukuran 2'5 Inch dan 3'0 Inch

I9-0-30-WRGB APP

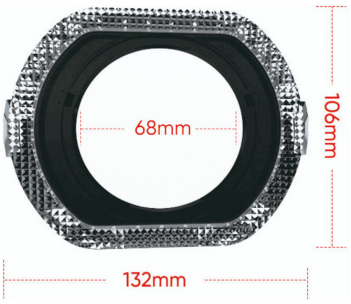



I9-U-30-WRGB APP

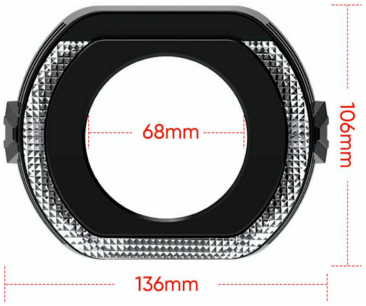

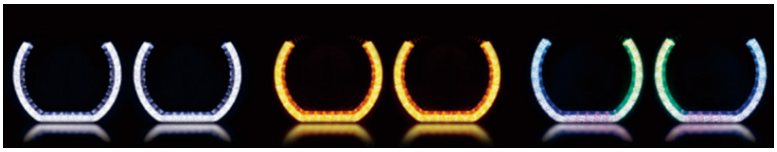

I9-L-30-WRGB APP



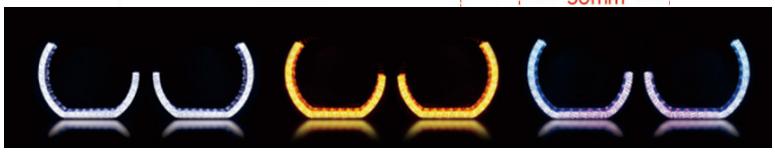

IC-0-30-WRGB APP

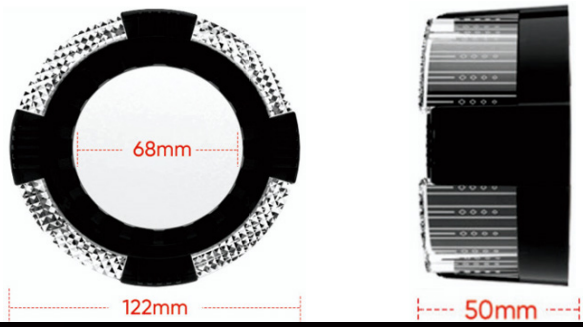

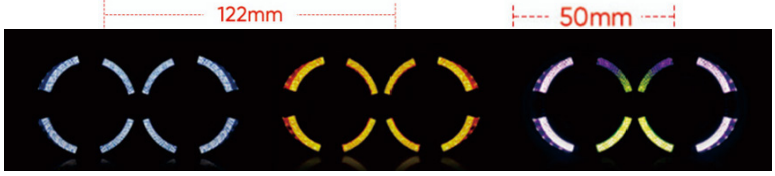

I5-70S-WRGB APP

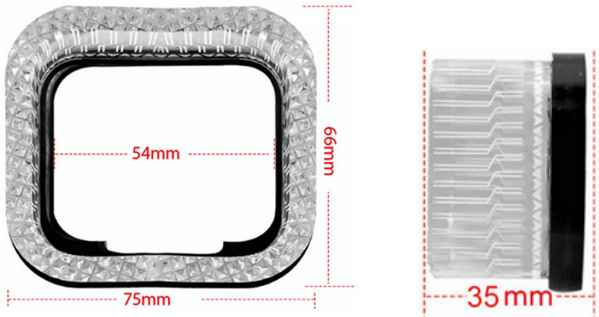





5D ACRYLIC SHROUD

Shroud 5D berbahan acrylic yang berfungsi mempercantik tampilan headlamp. Memberikan efek visual lebih modern dan membuat lampu terlihat lebih rapi serta premium. Tersedia dalam ukuran 2'5 Inch dan 3'0 Inch

MTC-I8-O-25-WRGB APP

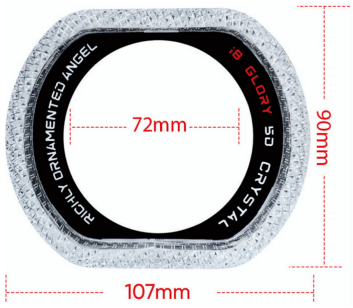

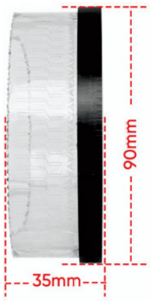



MTC-I8-O-30-WRGB APP

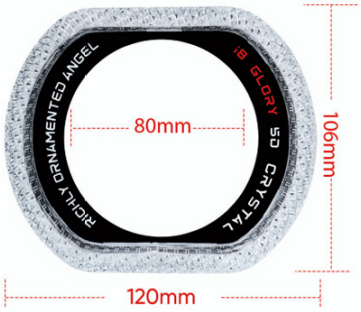

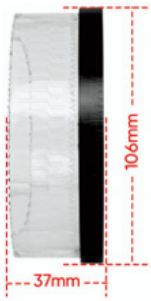



MTC-I8-U-30-WRGB APP

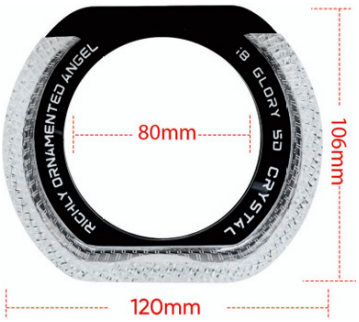

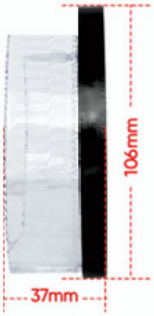

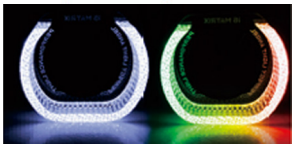

MTC-I5-O-30-W

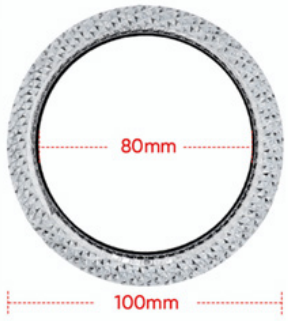

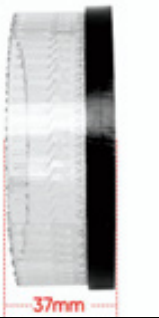



MTC-I5-70S-W

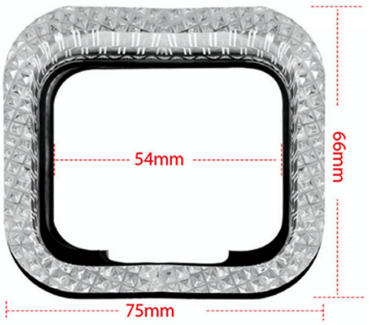



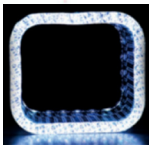



CAR SHROUD

Car Shroud adalah aksesoris penutup proyektor lampu yang berfungsi mempercantik tampilan bagian dalam headlamp. Membuat lampu terlihat lebih rapi dan tidak polos. Tersedia dalam ukuran 2'5 Inch dan 3'0 Inch.

BMW-25-CL-FB

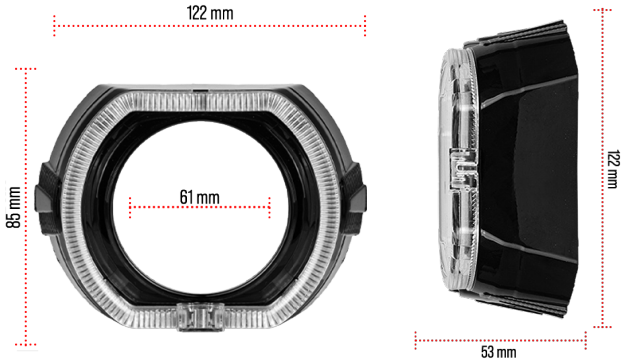

BMW-30-CL-FB

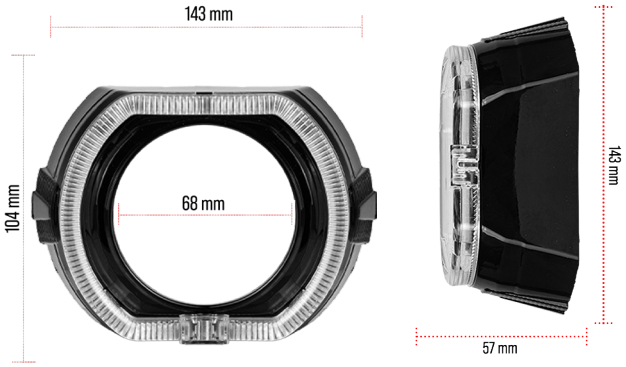

BMW-25-SP-FB

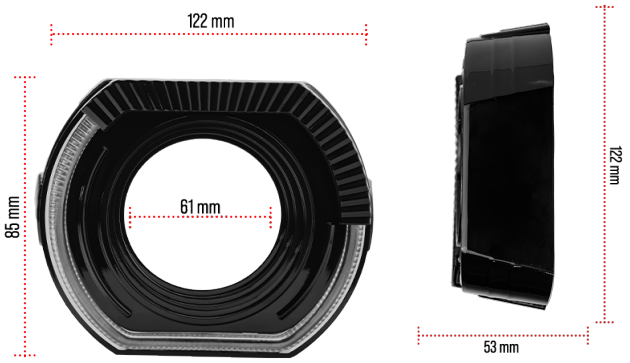

BMW-30-SP-FB

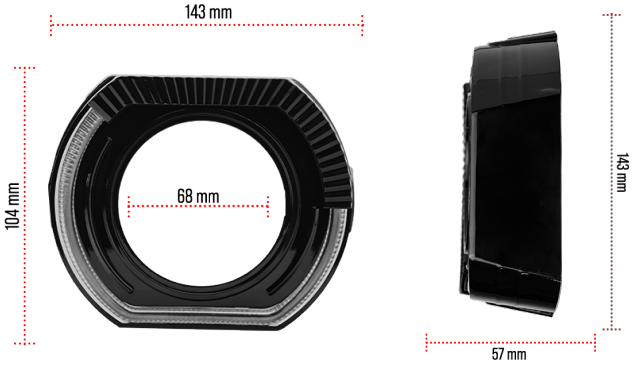

BMW-HYB-CL-CR

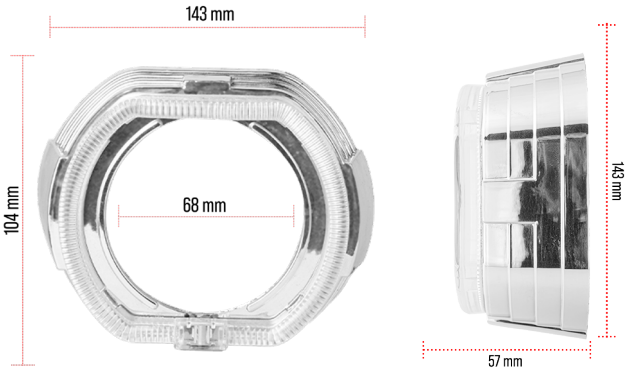

BMW-30-SP-WRGB APP

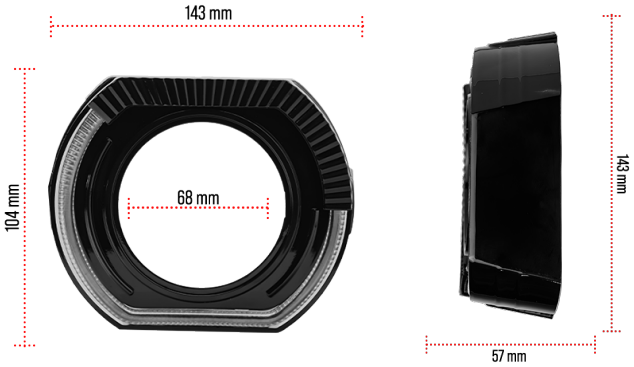



CAR SHROUD

Car Shroud adalah aksesoris penutup proyektor lampu yang berfungsi mempercantik tampilan bagian dalam headlamp. Membuat lampu terlihat lebih rapi dan tidak polos. Tersedia dalam ukuran 2'5 Inch dan 3'0 Inch.

OEM-30-TG-CR



OEM-30-LH-CR

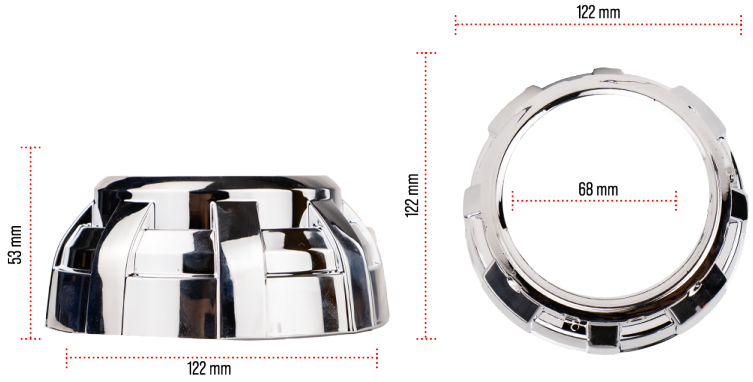

OEM-25-WS-CR





SLIM FRAME INNOVA

Membuat bagian dalam lampu terlihat lebih premium dan elegant

CAKAR INNOVA REBORN G



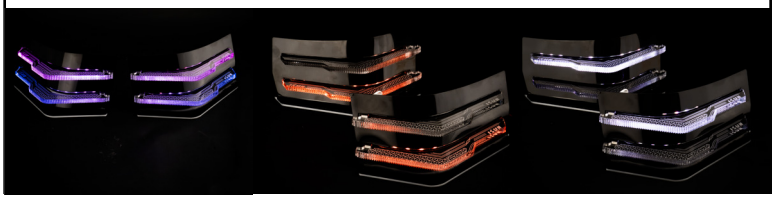

CAKAR INNOVA REBORN V



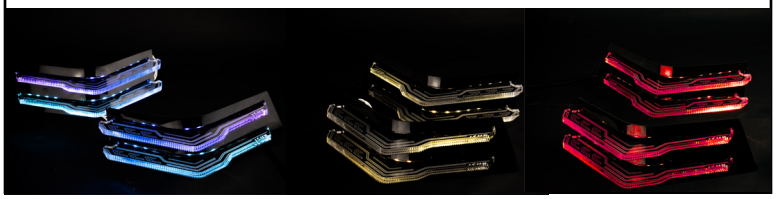

L SERIES INNOVA REBORN G V







BRACKET BI-LED

Dudukan atau adapter khusus yang digunakan untuk memasang projector Bi-LED ke dalam housing lampu mobil.

DB3 AVANZA 22

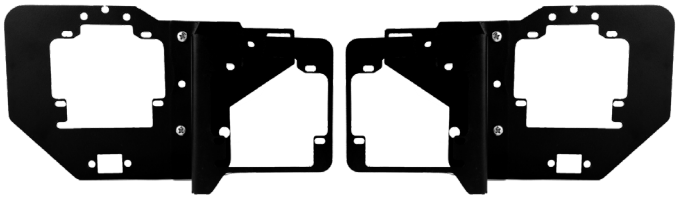

DB3 BRIO 20

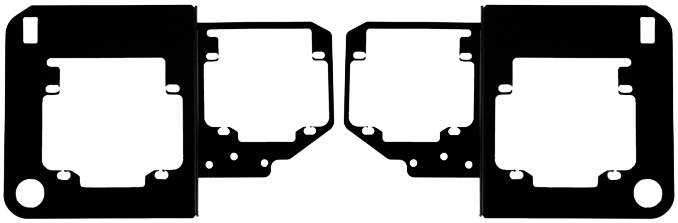

DB3 GRAND INNOVA

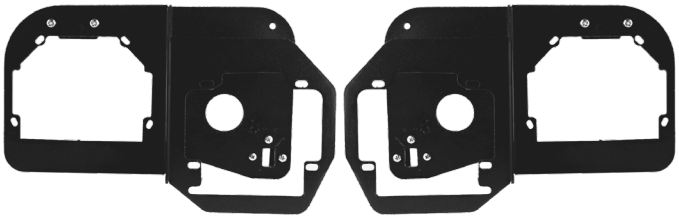

DB3 GRAND MAX

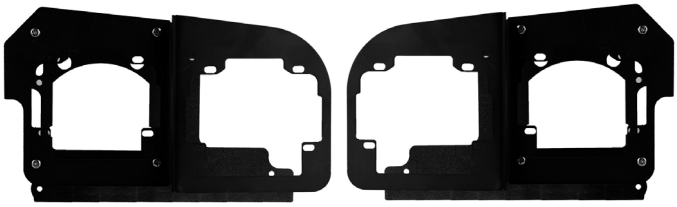

DB3 INNOVA G REBORN



DB3 RAZE

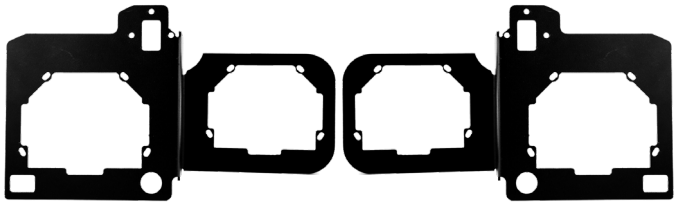



BRACKET BI-LED

Dudukan atau adapter khusus yang digunakan untuk memasang projector Bi-LED ke dalam housing lampu mobil.

DB3 ZENIX Q

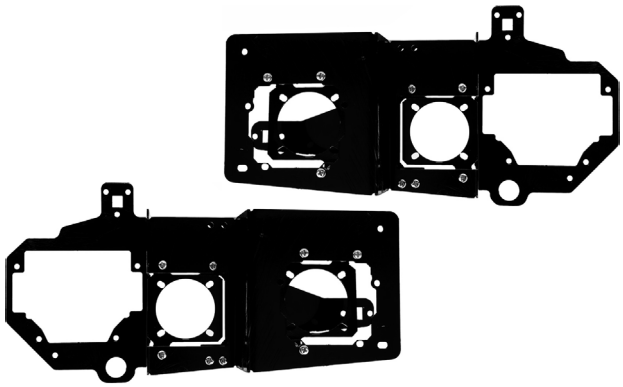

MX1 AGYA 24

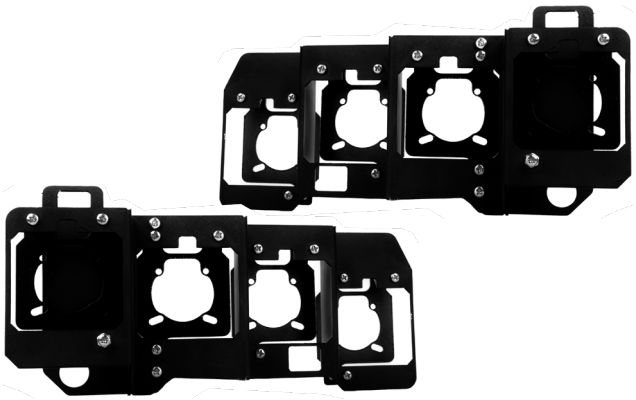

MX1 ALL NEW RUSH

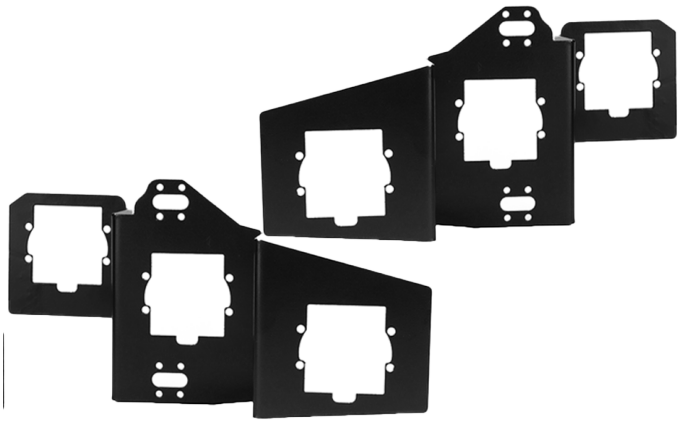

MX1 AVANZA 19



MX1 BRIO 24



MX1 CALYA

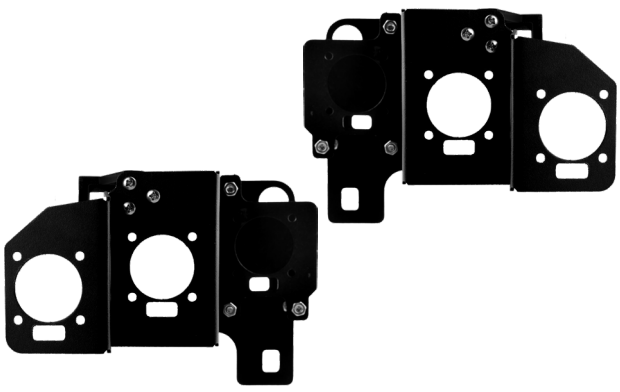



BRACKET BI-LED

Dudukan atau adapter khusus yang digunakan untuk memasang projector Bi-LED ke dalam housing lampu mobil.

MX1 CRV TURBO



MX1 JAZZ GK5

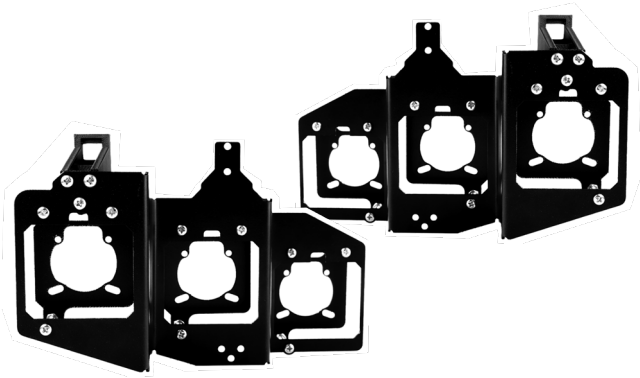

MX1 NEW HRV

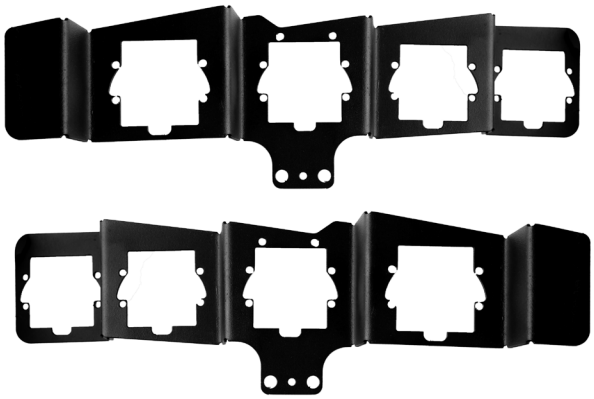

MX1 RAIZE



MX1 STARGIZER

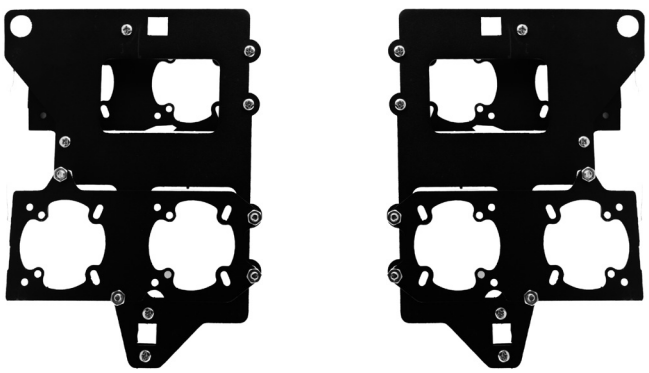

MX1 SUZUKI XL7

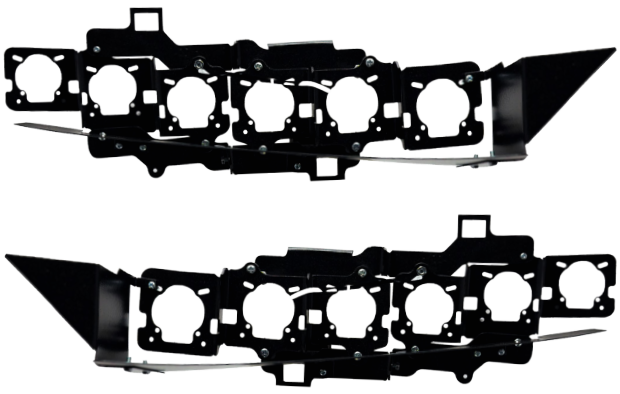



BRACKET BI-LED

Dudukan atau adapter khusus yang digunakan untuk memasang projector Bi-LED ke dalam housing lampu mobil.

MX1 VELOZ 23



MX1 EXPANDER CROSS

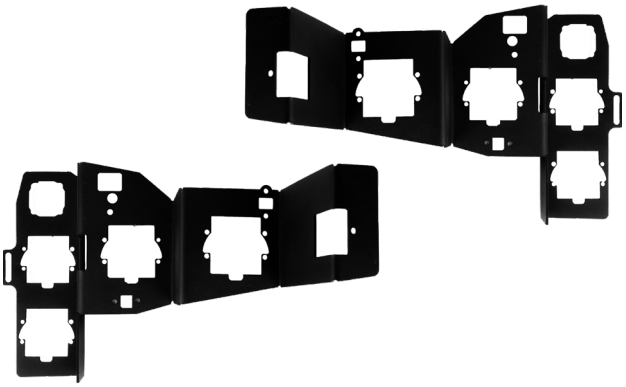

MX1 ZENIX G



MX1 ZENIX Q

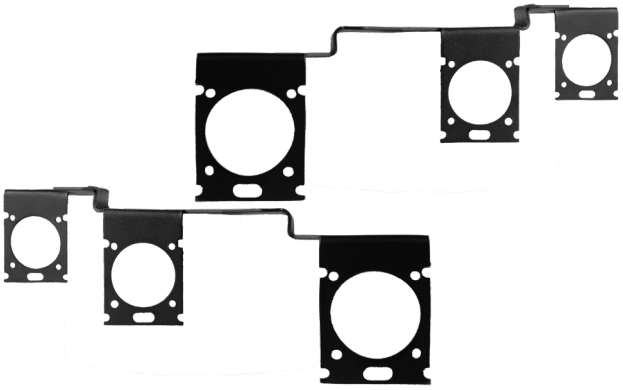



LED FESTOON

Lampu LED festoon khusus untuk interior mobil hadir dalam ukuran 31mm-41mm.

FSTP 2 CSP-1860 2C



Volt	DC 12V	Length	31 mm / 36 mm
Power	3W	Body	Allumunium
Ampere	0.25A	CANbus	Yes
Chip	CSP-1860	Function	Interior Light

FSTP 1 CSP-3570 HV



Volt	DC 12-60V	Length	31 mm / 36 mm
Power	3W	Body	Allumunium
Ampere	0.25A	CANbus	Yes
Chip	CSP-3570	Function	Interior Light

FSTP 18/27 SMD-3014



Volt	DC 12V	Length	31 mm / 36 mm
Power	1.5W	Body	Allumunium
Ampere	0.13A	CANbus	Yes
Chip	SMD-3014	Function	Interior Light

FSTP 1 CSP-1860



Volt	DC 12V	Length	31 mm / 36 mm
Power	1.5W	Body	Allumunium
Ampere	0.13A	CANbus	Yes
Chip	CSP-1860	Function	Interior Light



LED FESTOON

Lampu LED festoon khusus untuk interior mobil hadir dalam ukuran 31mm-41mm.

FSTP BOARD 24 COB

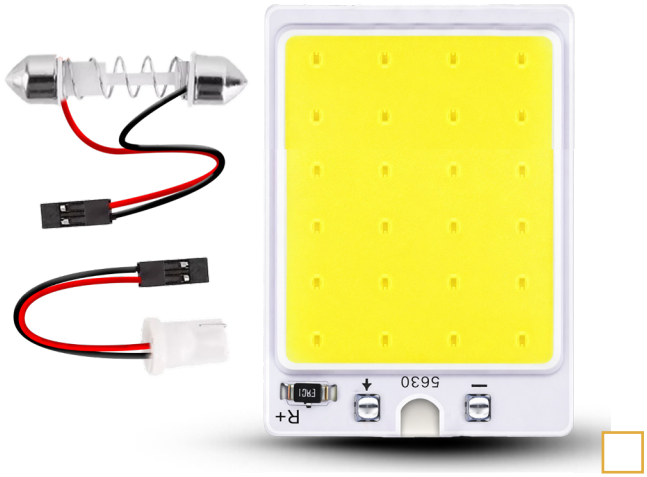

Volt	DC 12V	Length	31 mm - 41 mm / T10
Power	4W	Body	Allumunium
Ampere	0.3A	CANbus	No
Chip	COB-2535	Function	Interior Light

FSTP BOARD 18 SMD-3030 HV

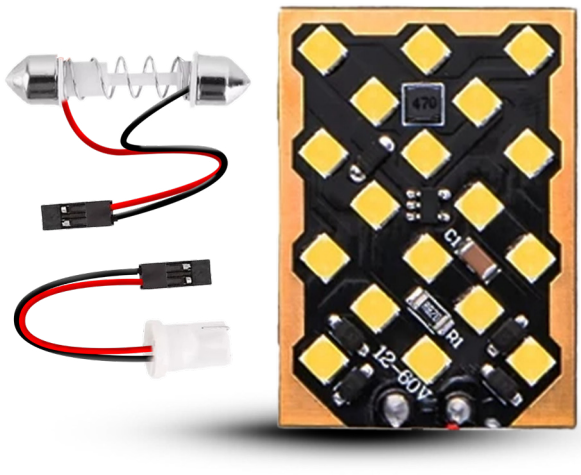

Volt	DC 12-60V	Length	31 mm - 41 mm / T10
Power	3W	Body	Allumunium
Ampere	0.25A	CANbus	Yes
Chip	SMD-3030	Function	Interior Light



LED SIGNAL LAMP

Lampu LED Signal Lamp tersedia dalam varian BA15S, BAU15S, 7440, 7443, 1157 yang diggunakan untuk lampu mundur, sein, dan rem

1156 BA15S 144-SMD 3014



Volt	DC 12-24V	Function	Signal Lamp, Reverse Lamp
Power	21W	Size	⌀ 20 mm x 57 mm
Ampere	1.75A	Body	Allumunium ; Glass
Chip	SMD-3014	CANbus	YES

1156 BA15S 150-SMD 4014



Volt	DC 12-36V	Function	Signal Lamp, Reverse Lamp
Power	23W	Size	⌀ 20 mm x 57 mm
Ampere	1.91A	Body	Allumunium ; Glass
Chip	SMD-4014	CANbus	YES

1156 BA15S 36-SMD 3030G FAN

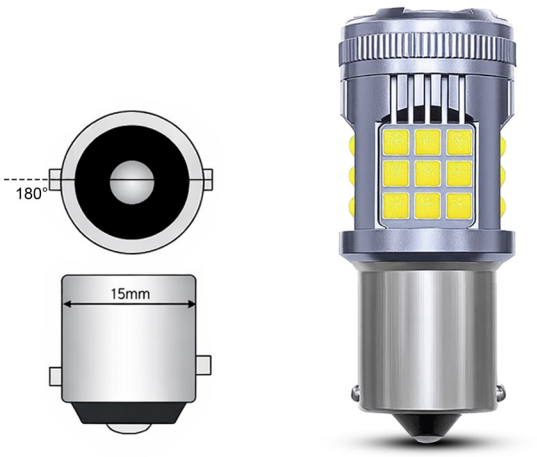

Volt	DC 12-30V	Function	Signal Lamp, Reverse Lamp
Power	32W	Size	⌀ 20 mm x 51 mm
Ampere	2.67A	Body	Allumunium ; Fan
Chip	SMD-3030G	CANbus	Yes

1156 BA15S 6-CSP 1860 FAN

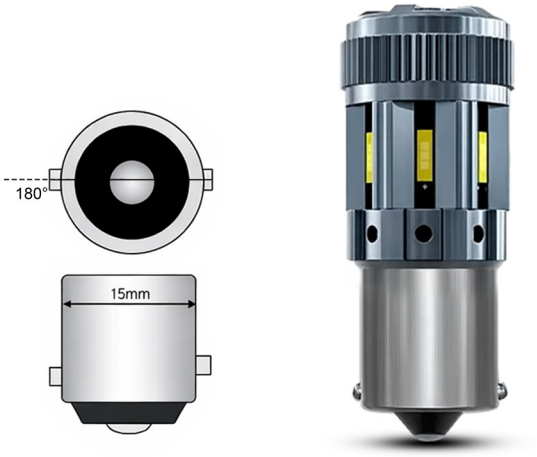

Volt	DC 12-24V	Function	Signal Lamp, Reverse Lamp
Power	27W	Size	⌀ 21 mm x 51 mm
Ampere	2.25A	Body	Allumunium ; Fan
Chip	CSP-1860	CANbus	Yes



LED SIGNAL LAMP

Lampu LED Signal Lamp tersedia dalam varian BA15S, BAU15S, 7440, 7443, 1157 yang diggunakan untuk lampu mundur, sein, dan rem

1156 BA15S 45-SMD 4014

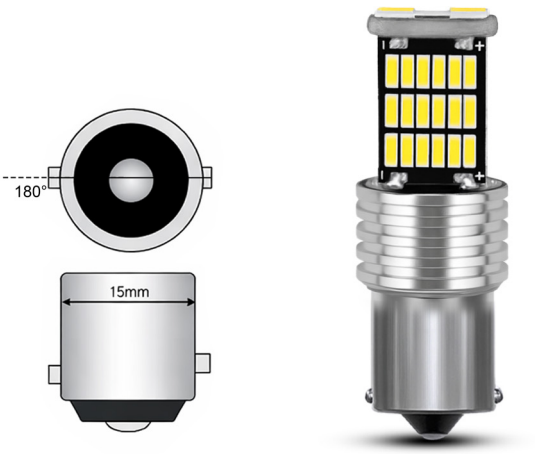

Volt	DC 12-24V	Function	Signal Lamp, Reverse Lamp
Power	5W	Size	∅ 18 mm x 52 mm
Ampere	0.42A	Body	Allumunium
Chip	SMD-4014	CANbus	No

1156 BA15S 33-SMD 5630

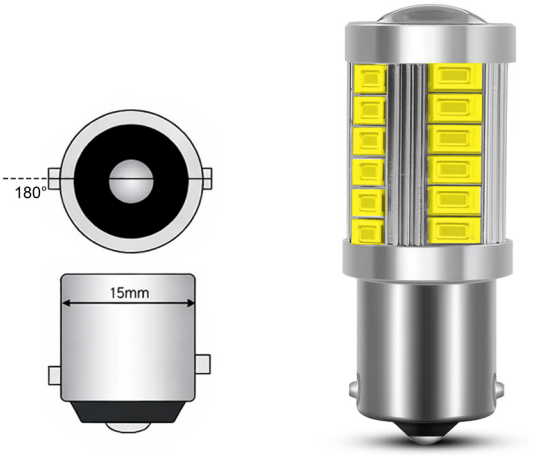

Volt	DC 12V	Function	Signal Lamp, Reverse Lamp
Power	3W	Size	∅ 18 mm x 52 mm
Ampere	0.25A	Body	Allumunium
Chip	SMD-5630	CANbus	No



LED SIGNAL LAMP

Lampu LED Signal Lamp tersedia dalam varian BA15S, BAU15S, 7440, 7443, 1157 yang diggunakan untuk lampu mundur, sein, dan rem

1156 BAU15S 144-SMD 3014

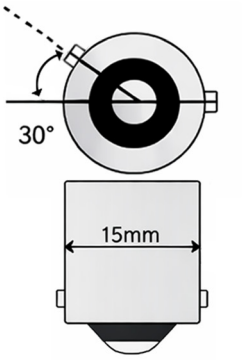



Volt	DC 12-24V	Function	Signal Lamp, Reverse Lamp
Power	21W	Size	⌀ 20 mm x 57 mm
Ampere	1.75A	Body	Allumunium ; Glass
Chip	SMD-3014	CANbus	YES

1156 BAU15S 150-SMD 4014

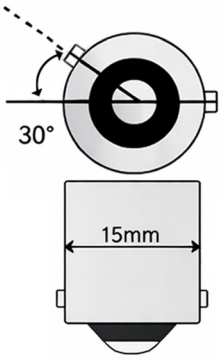



Volt	DC 12-36V	Function	Signal Lamp, Reverse Lamp
Power	23W	Size	⌀ 20 mm x 57 mm
Ampere	1.91A	Body	Allumunium ; Glass
Chip	SMD-4014	CANbus	YES

1156 BAU15S 36-SMD 3030G FAN

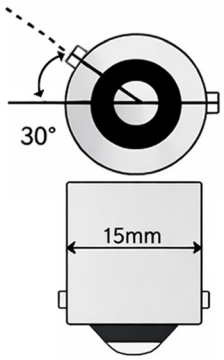



Volt	DC 12-30V	Function	Signal Lamp, Reverse Lamp
Power	32W	Size	⌀ 20 mm x 51 mm
Ampere	2.67A	Body	Allumunium ; Fan
Chip	SMD-3030G	CANbus	Yes

1156 BAU15S 6-CSP 1860 FAN

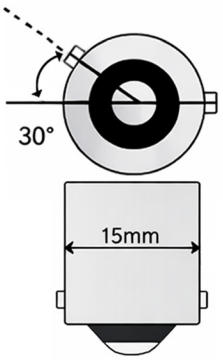



Volt	DC 12-24V	Function	Signal Lamp, Reverse Lamp
Power	27W	Size	⌀ 21 mm x 51 mm
Ampere	2.25A	Body	Allumunium ; Fan
Chip	CSP-1860	CANbus	Yes



LED SIGNAL LAMP

Lampu LED Signal Lamp tersedia dalam varian BA15S, BAU15S, 7440, 7443, 1157 yang diggunakan untuk lampu mundur, sein, dan rem

1156 BAU15S 45-SMD 4014

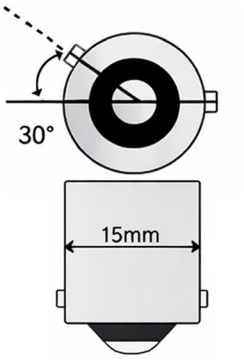



Volt	DC 12-24V	Function	Signal Lamp, Reverse Lamp
Power	5W	Size	⌀ 18 mm x 52 mm
Ampere	0.42A	Body	Allumunium
Chip	SMD-4014	CANbus	No

1156 BAU15S 33-SMD 5630

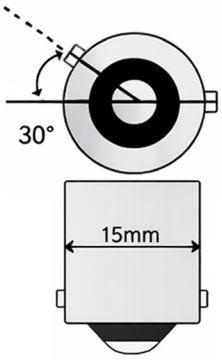



Volt	DC 12V	Function	Signal Lamp, Reverse Lamp
Power	3W	Size	⌀ 18 mm x 52 mm
Ampere	0.25A	Body	Allumunium
Chip	SMD-5630	CANbus	No



LED SIGNAL LAMP

Lampu LED Signal Lamp tersedia dalam varian BA15S, BAU15S, 7440, 7443, 1157 yang diggunakan untuk lampu mundur, sein, dan rem

T20 7440 144-SMD 3014



Volt	DC 12-24V	Function	Signal Lamp, Reverse Lamp
Power	21W	Size	⌀ 20 mm x 58 mm
Ampere	1.75A	Body	Allumunium ; Glass
Chip	SMD-3014	CANbus	YES

T20 7440 150-SMD 4014



Volt	DC 12-36V	Function	Signal Lamp, Reverse Lamp
Power	23W	Size	⌀ 20 mm x 60 mm
Ampere	1.91A	Body	Allumunium ; Glass
Chip	SMD-4014	CANbus	YES

T20 7440 36-SMD 3030G FAN



Volt	DC 12-30V	Function	Signal Lamp, Reverse Lamp
Power	32W	Size	⌀ 20 mm x 55 mm
Ampere	2.67A	Body	Allumunium ; Fan
Chip	SMD-3030G	CANbus	Yes

T20 7440 6-CSP 1860 FAN



Volt	DC 12-24V	Function	Signal Lamp, Reverse Lamp
Power	27W	Size	⌀ 21 mm x 55 mm
Ampere	2.25A	Body	Allumunium ; Fan
Chip	CSP-1860	CANbus	Yes



LED SIGNAL LAMP

Lampu LED Signal Lamp tersedia dalam varian BA15S, BAU15S, 7440, 7443, 1157 yang diggunakan untuk lampu mundur, sein, dan rem

T20 7440 45-SMD 4014

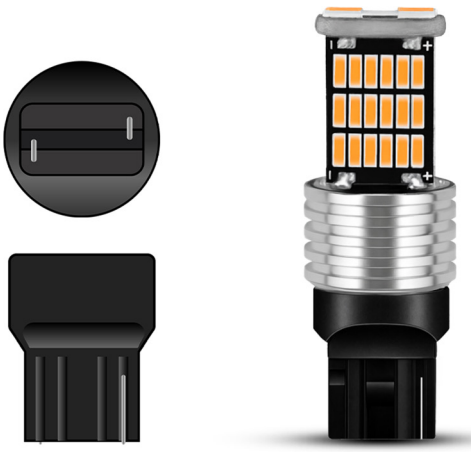

Volt	DC 12-24V	Function	Signal Lamp, Reverse Lamp
Power	5W	Size	⌀ 18 mm x 52 mm
Ampere	0.42A	Body	Allumunium
Chip	SMD-4014	CANbus	No

T20 7440 33-SMD 5630

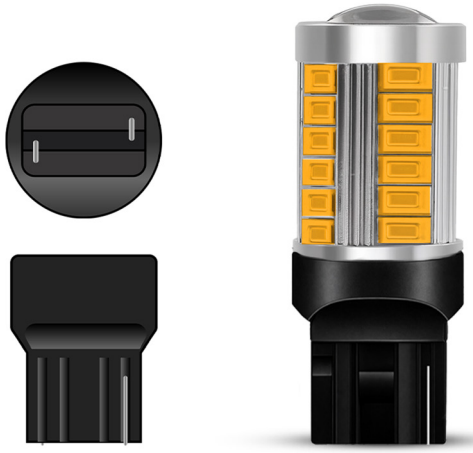

Volt	DC 12V	Function	Signal Lamp, Reverse Lamp
Power	3W	Size	⌀ 18 mm x 60 mm
Ampere	0.25A	Body	Allumunium
Chip	SMD-5630	CANbus	No



LED SIGNAL LAMP

Lampu LED Signal Lamp tersedia dalam varian BA15S, BAU15S, 7440, 7443, 1157 yang diggunakan untuk lampu mundur, sein, dan rem

T20 7443 144-SMD 3014



Volt	DC 12-24V	Function	Brake Lamp
Power	3W/11W	Size	⌀ 20 mm x 58 mm
Ampere	1A	Body	Allumunium ; Glass
Chip	SMD-3014	CANbus	YES

T20 7443 150-SMD 4014



Volt	DC 12-36V	Function	Brake Lamp
Power	3W/7W	Size	⌀ 20 mm x 60 mm
Ampere	0.6A	Body	Allumunium ; Glass
Chip	SMD-4014	CANbus	YES

T20 7443 36-SMD 3030G FAN

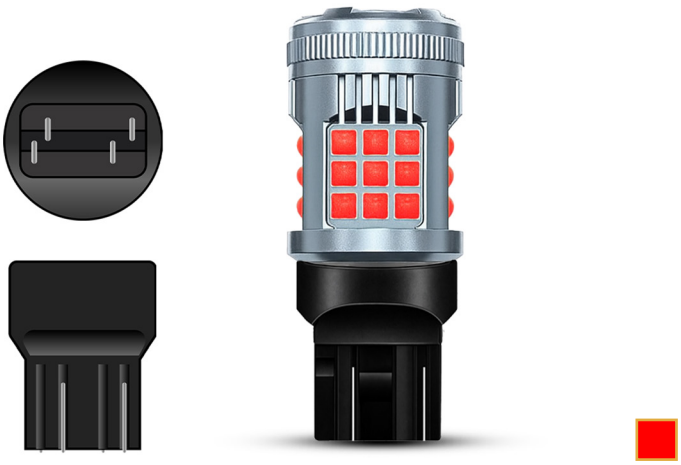

Volt	DC 12-30V	Function	Brake Lamp
Power	7W/20W	Size	⌀ 20 mm x 55 mm
Ampere	1.7A	Body	Allumunium ; Fan
Chip	SMD-3030G	CANbus	Yes

T20 7443 6-CSP 1860 FAN



Volt	DC 12-24V	Function	Brake Lamp
Power	6W/18W	Size	⌀ 21 mm x 55 mm
Ampere	1.5A	Body	Allumunium ; Fan
Chip	CSP-1860	CANbus	Yes



LED SIGNAL LAMP

Lampu LED Signal Lamp tersedia dalam varian BA15S, BAU15S, 7440, 7443, 1157 yang diggunakan untuk lampu mundur, sein, dan rem

T20 7443 45-SMD 4014

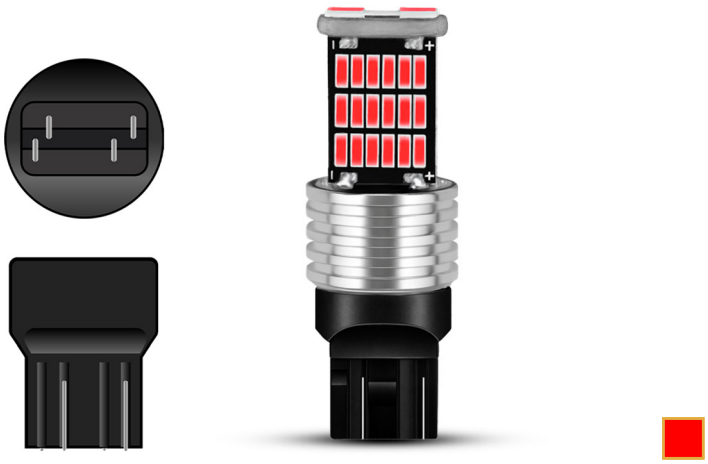

Volt	DC 12-24V	Function	Brake Lamp
Power	2W/5W	Size	⌀ 18 mm x 52 mm
Ampere	0.5A	Body	Allumunium
Chip	SMD-4014	CANbus	No

T20 7443 33-SMD 5630



Volt	DC 12V	Function	Brake Lamp
Power	1W/3W	Size	⌀ 18 mm x 60 mm
Ampere	0.25A	Body	Allumunium
Chip	SMD-5630	CANbus	No



LED SIGNAL LAMP

Lampu LED Signal Lamp tersedia dalam varian BA15S, BAU15S, 7440, 7443, 1157 yang diggunakan untuk lampu mundur, sein, dan rem

1157 BAY15D 144-SMD 3014



Volt	DC 12-24V	Function	Brake Lamp
Power	3W/11W	Size	⌀ 20 mm x 57 mm
Ampere	1A	Body	Allumunium ; Glass
Chip	SMD-3014	CANbus	YES

1157 BAY15D 150-SMD 4014

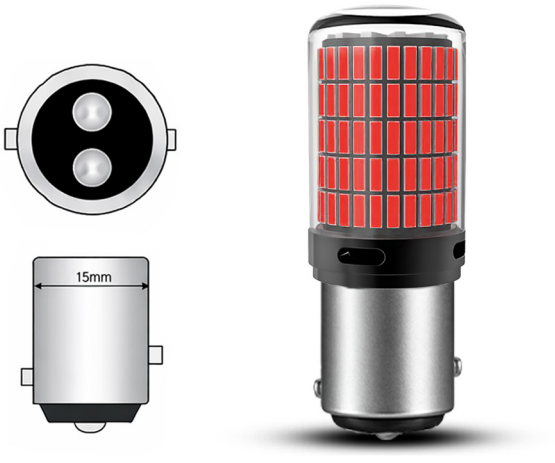

Volt	DC 12-36V	Function	Brake Lamp
Power	3W/7W	Size	⌀ 20 mm x 57 mm
Ampere	0.6A	Body	Allumunium ; Glass
Chip	SMD-4014	CANbus	YES

1157 BAY15D 36-SMD 3030G FAN

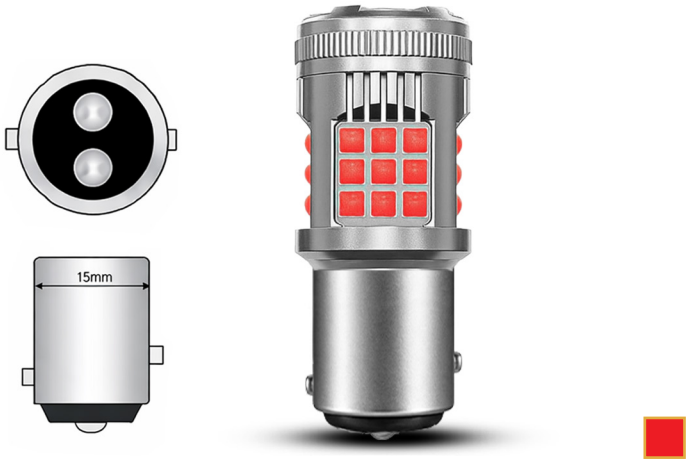

Volt	DC 12-30V	Function	Brake Lamp
Power	7W/20W	Size	⌀ 20 mm x 51 mm
Ampere	1.7A	Body	Allumunium ; Fan
Chip	SMD-3030G	CANbus	Yes

1157 BAY15D 6-CSP 1860 FAN



Volt	DC 12-24V	Function	Brake Lamp
Power	6W/18W	Size	⌀ 21 mm x 51 mm
Ampere	1.5A	Body	Allumunium ; Fan
Chip	CSP-1860	CANbus	Yes



LED SIGNAL LAMP

Lampu LED Signal Lamp tersedia dalam varian BA15S, BAU15S, 7440, 7443, 1157 yang diggunakan untuk lampu mundur, sein, dan rem

1157 BAY15D 45-SMD 4014

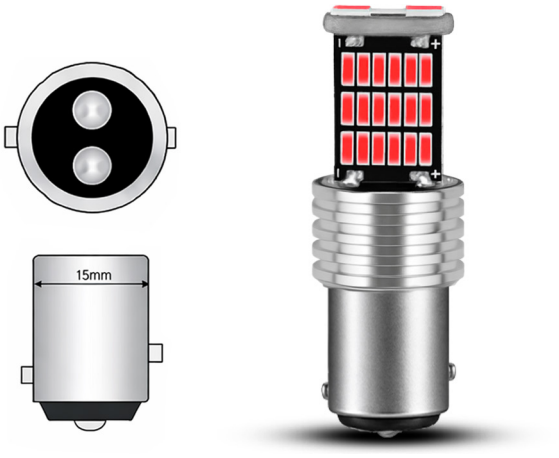

Volt	DC 12-24V	Function	Brake Lamp
Power	2W/5W	Size	⌀ 18 mm x 52 mm
Ampere	0.5A	Body	Allumunium
Chip	SMD-4014	CANbus	No

1157 BAY15D 33-SMD 5630



Volt	DC 12V	Function	Brake Lamp
Power	1W/3W	Size	⌀ 18 mm x 52 mm
Ampere	0.25A	Body	Allumunium
Chip	SMD-5630	CANbus	No



LED T10 ≤ 30 MM

T10 yang panjangnya kurang dari atau sama dengan 30mm
sehingga bisa diggunakan untuk di banyak tempat
seperti plafon, lampu kota, lampu bagasi, dsb

T10 MAX 15 SMD-3030



Volt	DC 12-24V	Lumen	3200Lm
Power	2 x 1.5W	Size	10 mm x 30 mm
Ampere	0.25A	Body	Allumunium
Chip	SMD-3030	CANbus	Yes

T10 ZENITH 15 SMD-2016



Volt	DC 12-60V	Lumen	3000 Lm
Power	2 x 1.5W	Size	10 mm x 30 mm
Ampere	0.25A	Body	Allumunium
Chip	SMD-2016	CANbus	Yes

T10 30 SMD-2016 HV



Volt	DC 12-60V	Lumen	2500Lm
Power	2 x 3W	Size	10 mm x 30 mm
Ampere	0.5A	Body	Allumunium
Chip	SMD-2016	CANbus	Yes

T10 24 SMD-4014



Volt	DC 12-24V	Lumen	2000Lm
Power	2 x 3W	Size	10 mm x 29 mm
Ampere	0.5A	Body	Allumunium
Chip	SMD-4014	CANbus	Yes



LED T10 ≤ 30 MM

T10 yang panjangnya kurang dari atau sama dengan 30mm
sehingga bisa diggunakan untuk di banyak tempat
seperti plafon, lampu kota, lampu bagasi, dsb

T10 3 CSP-2055

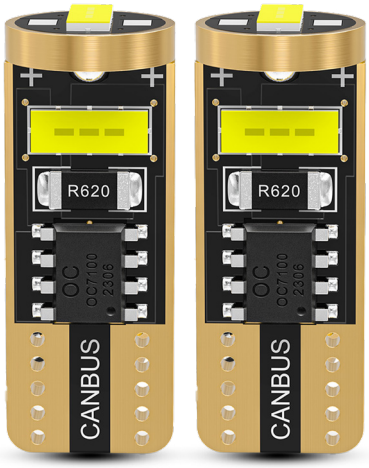

Volt	DC 12-24V	Lumen	2700Lm
Power	2 x 2W	Size	10 mm x 25 mm
Ampere	0.3A	Body	Allumunium
Chip	CSP-2055	CANbus	Yes

T10 3 SMD-3838

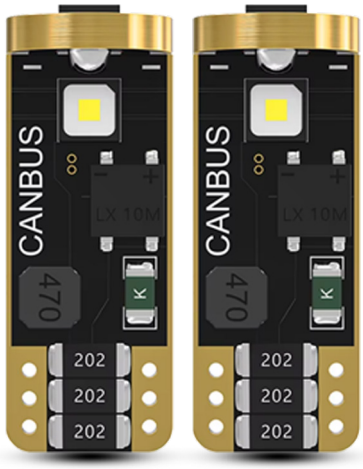

Volt	DC 12-24V	Lumen	3200 Lm
Power	2 x 3W	Size	10 mm x 25 mm
Ampere	0.5A	Body	Allumunium
Chip	SMD-3838	CANbus	Yes

T10 4 SMD-3030G



Volt	DC 12V	Lumen	1200Lm
Power	2 x 2W	Size	10 mm x 26 mm
Ampere	0.3A	Body	Allumunium
Chip	SMD-3030G	CANbus	Yes

T10 ROCKET 2 SMD-3030



Volt	DC 12V	Lumen	600Lm
Power	2 x 0.5W	Size	10 mm x 36 mm
Ampere	0.1A	Body	ABS-Plastic
Chip	SMD-3030	CANbus	No



LED T10 > 30 MM

Lampu T10 yang panjangnya melebihi 30mm sehingga hanya bisa diggunakan untuk lampu senja

T10 10 SMD-3020 HV



Volt	DC 12-60V	Lumen	4200Lm
Power	2 x 3W	Size	10 mm x 36 mm
Ampere	0.5A	Body	Allumunium
Chip	SMD-3020 EMC	CANbus	Yes

T10 2 CSP-3570 HV



Volt	DC 12-60V	Lumen	4700 Lm
Power	2 x 3W	Size	10 mm x 32 mm
Ampere	0.5A	Body	Allumunium
Chip	CSP-3570	CANbus	Yes

T10 57 SMD-3014

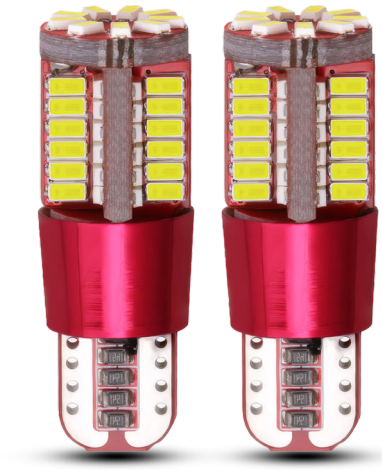

Volt	DC 12V	Lumen	1400Lm
Power	2 x 2.5W	Size	10 mm x 34 mm
Ampere	0.4A	Body	Allumunium
Chip	SMD-3014	CANbus	Yes

T10 5 SMD-3030 GLS



Volt	DC 12V	Lumen	1000Lm
Power	2 x 1W	Size	10 mm x 36 mm
Ampere	0.17A	Body	Glass
Chip	SMD-3030	CANbus	No



LED T10 > 30 MM

Lampu T10 yang panjangnya melebihi 30mm sehingga hanya bisa diggunakan untuk lampu senja

T10 15 SMD-2016

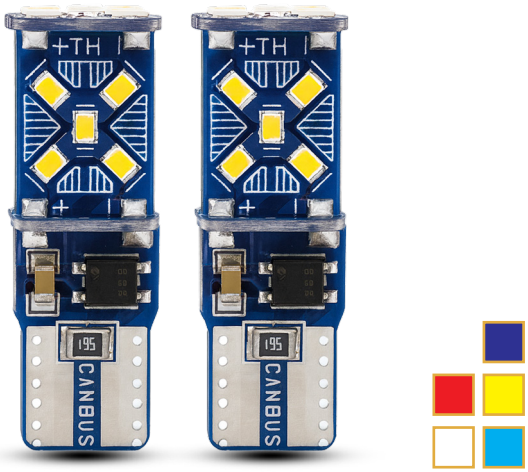

Volt	DC 12-24V	Lumen	3000Lm
Power	2 x 2.5W	Size	10 mm x 34 mm
Ampere	0.4A	Body	Allumunium
Chip	SMD-2016	CANbus	Yes



LED T15 W16W

Lampu LED dengan socket T15 yang memiliki konsumsi daya rendah dan hasil cahaya maximal. Cocok diggunakan untuk lampu mundur dan lampu senja / kota pada kendaraan.

T15 45 SMD-4014

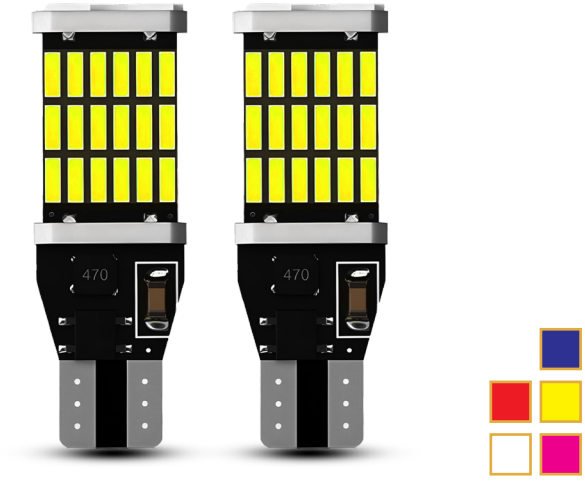

Volt	DC 12-24V	Lumen	5000Lm
Power	2 x 5W	Size	10 mm x 15mm x 40 mm
Ampere	0.85A	Body	Allumunium
Chip	SMD-4014	CANbus	Yes

T15 48 SMD-2016

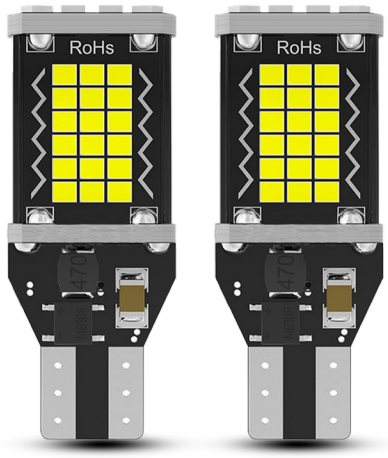

Volt	DC 12-24V	Lumen	5500 Lm
Power	2 x 5W	Size	10 mm x 15mm x 40 mm
Ampere	0.85A	Body	Allumunium
Chip	SMD-2016	CANbus	Yes

T15 15 SMD-3020 EMC HV

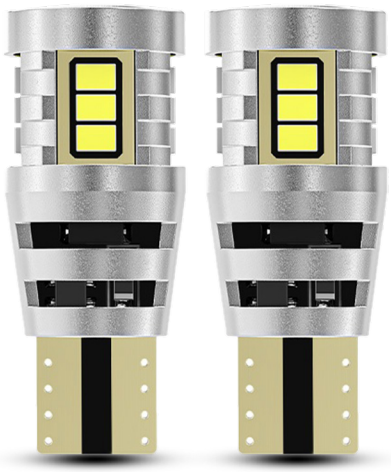

Volt	DC 12V	Lumen	10.000Lm
Power	2 x 7W	Size	10 mm x 15mm x 35 mm
Ampere	1.2A	Body	Allumunium
Chip	SMD-3020 EMC	CANbus	Yes

T15 3 CSP-3570 HV



Volt	DC 12V	Lumen	5100Lm
Power	2 x 5W	Size	10 mm x 15mm x 35 mm
Ampere	0.85A	Body	Allumunium
Chip	CSP-3570	CANbus	Yes



AKSESORIS

Komponen pendukung yang digunakan untuk membantu instalasi lampu kendaraan agar terpasang dengan presisi, aman, serta menghasilkan pencahayaan optimal dan tampilan yang lebih premium.

DEMON EYES



DEMON EYES RGB



2 IN 1 DEMON EYES RGB



2 IN 1 DEMON EYES WRGB



DRL FLEXIBLE SOFT LIGHT 30 CM



DRL FLEXIBLE SOFT LIGHT 60 CM





AKSESORIS

Komponen pendukung yang digunakan untuk membantu instalasi lampu kendaraan agar terpasang dengan presisi, aman, serta menghasilkan pencahayaan optimal dan tampilan yang lebih premium.

DRL FLEXIBLE SOFT LIFHT WRGB 30 CM



DRL FLEXIBLE SOFT LIFHT WRGB 60 CM



BRACKET FOGLAMP 3.0’ TYT



BRACKET FOGLAMP 3.0’ HND



BRACKET FOGLAMP 2.0’ HND



ADAPTOR FOGLAMP UNIVERSAL

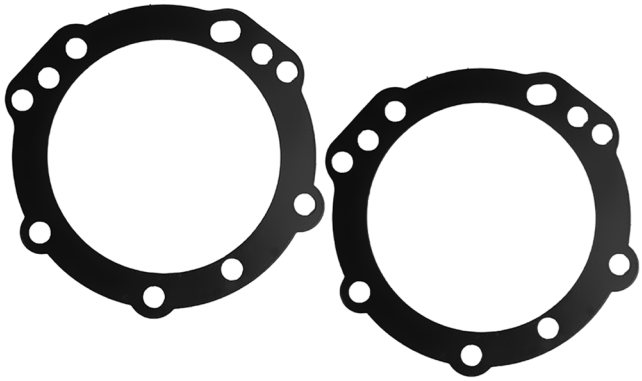



AKSESORIS

Komponen pendukung yang digunakan untuk membantu instalasi lampu kendaraan agar terpasang dengan presisi, aman, serta menghasilkan pencahayaan optimal dan tampilan yang lebih premium.

BRACKET LUBANG 25/50MM

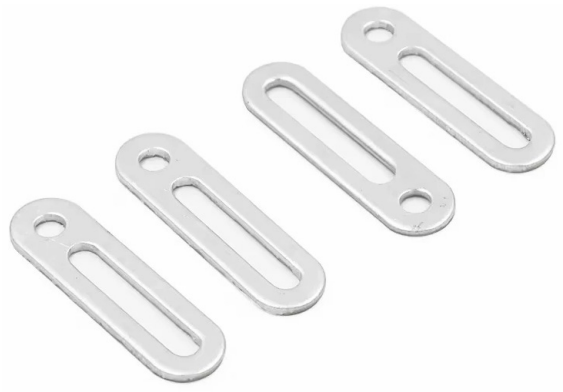

RESISTOR SEIN 6 OHM/50 W

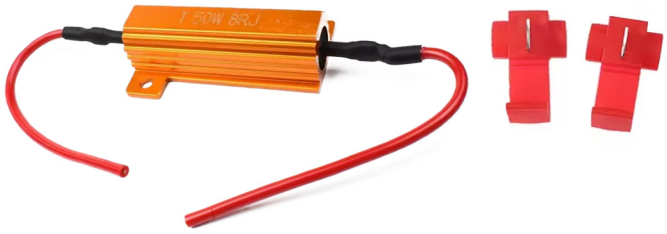

LEM BUTYL MIKA HEADLAMP



LEM EPOXY AB



COVER LUBANG HEADLAMP



KIPAS RETROFIT

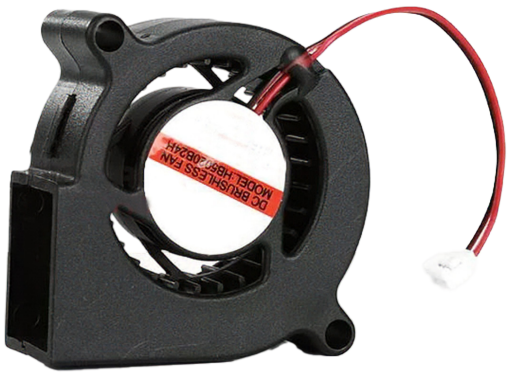



AKSESORIS

Komponen pendukung yang digunakan untuk membantu instalasi lampu kendaraan agar terpasang dengan presisi, aman, serta menghasilkan pencahayaan optimal dan tampilan yang lebih premium.

CENTRIC RING 2.5’ TO 3.0’





WIRING HARNESS KIT

Aksesoris untuk instalasi lampu mobil agar pemasangan lebih rapi, aman, dan stabil tanpa mengganggu sistem kelistrikan kendaraan.

CABLE RELAY SINGLE

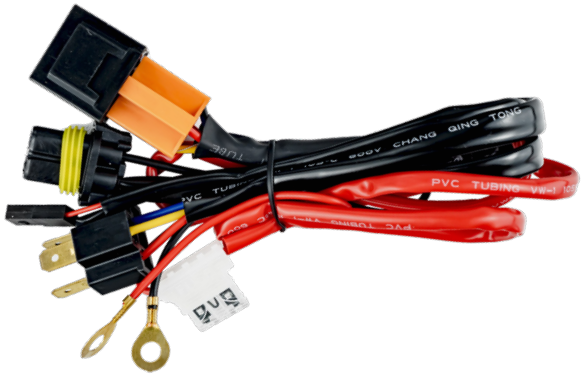

CABLE RELAY DOUBLE



CABLE RELAY SET 500W



CABLE RELAY FOGLAMP



RELAY 4 KAKI 12V/80A

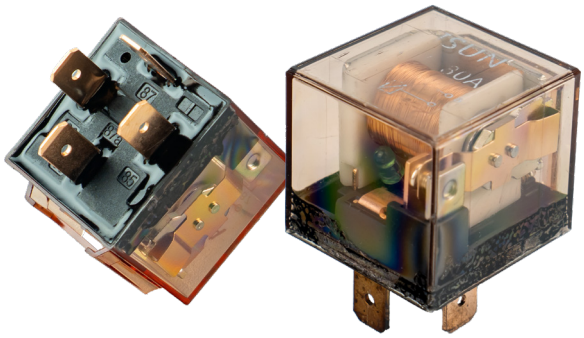

BANGKU RELAY 4/5 KAKI

TANPA KABEL



KABEL





WIRING HARNESS KIT

Aksesoris untuk instalasi lampu mobil agar pemasangan lebih rapi, aman, dan stabil tanpa mengganggu sistem kelistrikan kendaraan.

RELAY & FUSE BOX

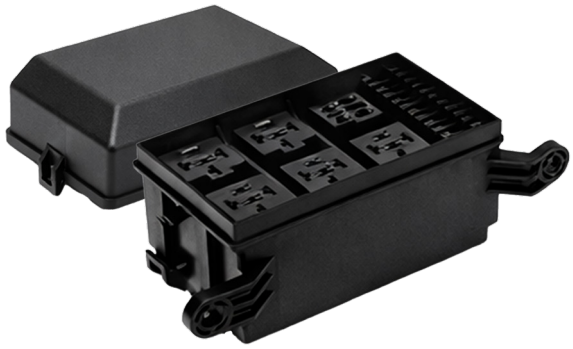

SEKRING/FUSE DX (BIG)

- 10A
- 15A
- 20A
- 100 PCS



SEKRING/FUSE BX (OEM)

- 5A
- 7.5A
- 10A
- 15A
- 20A
- 25A
- 100 PCS



SOCKET FUSE DX HOLDER

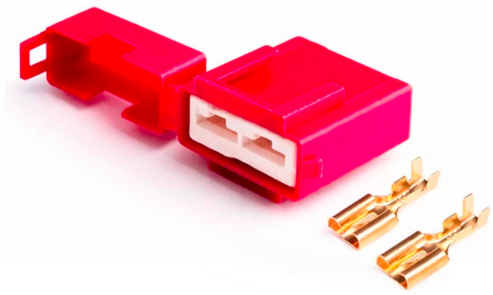

SOCKET H4 MALE/FEMALE

FEMALE



MALE

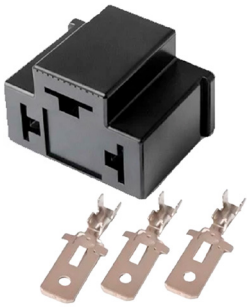

SOCKET H11 MALE/FEMALE

FEMALE



MALE





WIRING HARNESS KIT

Aksesoris untuk instalasi lampu mobil agar pemasangan lebih rapi, aman, dan stabil tanpa mengganggu sistem kelistrikan kendaraan.

SOCKET HB3/HB4 MALE/FEMALE

FEMALE

MALE



SOCKET WATERPROOF



- 1 PIN
- 2 PIN
- 4 PIN
- 3 PIN
- 6 PIN
- 2 PIN CABLE
- 4 PIN CABLE
- 6 PIN CABLE

LAKBAN KAIN 25MM X 15M



SKUN RING M6/M8

- M8
- M6
- 100 PCS



SKUN GEPENG MALE/FEMALE

- FEMALE
- MALE
- 100 PCS



SPIRAL CABLE PROTECTOR 5MM/7MM/10MM

- 5MM X 200M
- 7MM X 200M
- 10MM X 100M





WIRING HARNESS KIT

Aksesoris untuk instalasi lampu mobil agar pemasangan lebih rapi, aman, dan stabil tanpa mengganggu sistem kelistrikan kendaraan.

SAKLAR FOGLAMP SINGLE



- S2222
- S2233
- S2040
- S2336

SAKLAR FOGLAMP DOUBLE



- V2222
- V2233
- V2040
- V2336